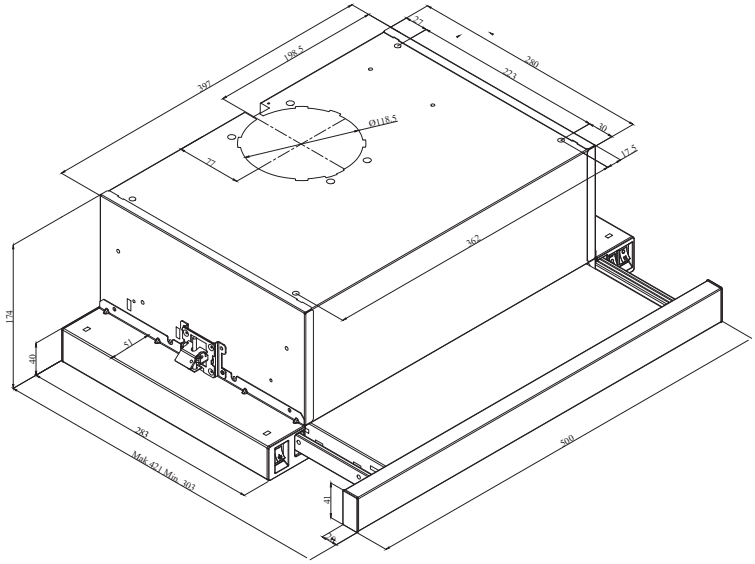
307
108.5
27
280
273
30
17.5
Ø118.5
77
360
174
40
51
263
Mod. 421 Min. 301
500
41
30

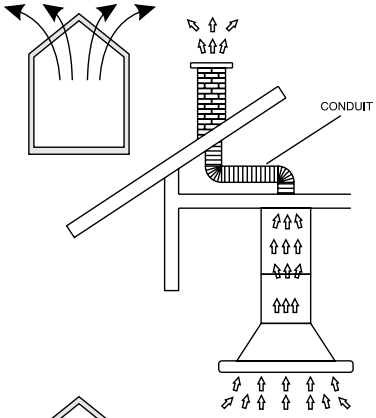
CONDUIT

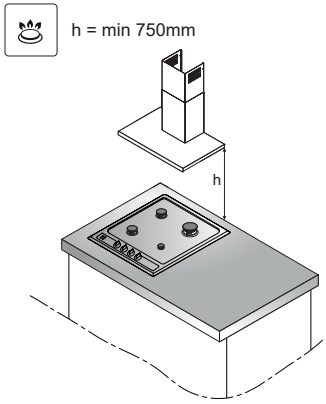
h = min 750mm
h

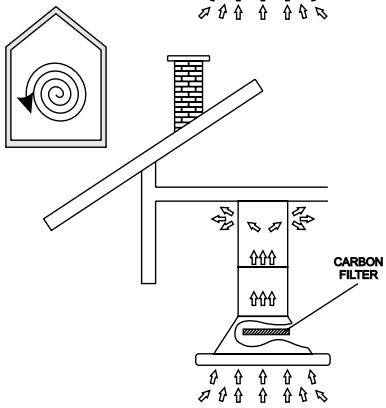
CARBON
FILTER

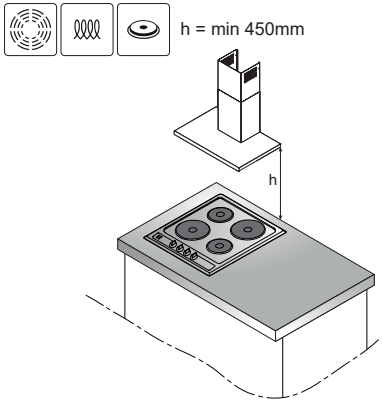
h = min 450mm
h