GRAM

Type

20KPI 674

20KPI 674 X

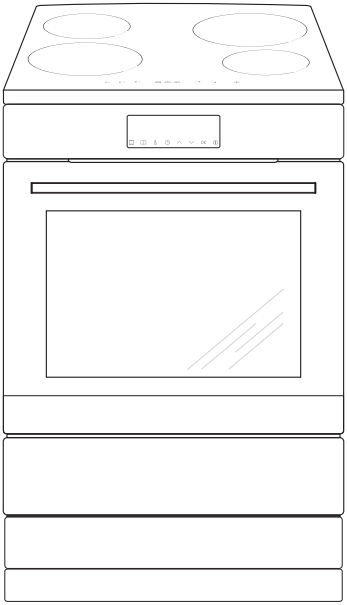

EN INSTRUCTION MANUAL

DEAR CUSTOMER,

The cooker is exceptionally easy to use and extremely efficient. After reading the instruction manual, operating the cooker will be easy.

Before being packaged and leaving the manufacturer, the cooker was thoroughly checked with regard to safety and functionality.

Before using the appliance, please read the instruction manual carefully.
By following these instructions carefully you will be able to avoid any problems in using the appliance.

It is important to keep the instruction manual and store it in a safe place so that it can be consulted at any time.
It is necessary to follow the instructions in the manual carefully in order to avoid possible accidents.

Caution!
Do not use the cooker until you have read this instruction manual.

The cooker is intended for household use only.

The manufacturer reserves the right to introduce changes which do not affect the operation of the appliance.

TABLE OF CONTENTS

Safety instructions 4

Description of the appliance 9

Installation 12

Operation 15

Baking in the oven – practical hints 35

Test dishes 38

Cleaning and maintenance 40

Technical data 47

Warning: The appliance and its accessible parts become hot during use. Care should be taken to avoid touching heating elements. Children less than 8 years of age shall be kept away unless continuously supervised.

This appliance can be used by children aged from 8 years and above and persons with reduced physical, sensory or mental capabilities or lack of experience and knowledge if they have been given supervision or instruction concerning use of the appliance in a safe way and understand the hazards involved. Children shall not play with the appliance. Cleaning and user maintenance shall not be made by children without supervision.

Warning: Unattended cooking on a hob with fat or oil can be dangerous and may result in fire.

NEVER try to extinguish a fire with water, but switch off the appliance and then cover flame e.g. with a lid or a fire blanket.

Warning: Danger of fire: do not store items on the cooking surfaces.

Warning: If the surface is cracked, switch off the appliance to avoid the possibillity of electric shock.

Metallic objects, such as knives, forks, spoons and lids should not be placed on the hob surface since they can get hot.

After use, switch off the hob element by its control and do not rely on the pan detector.

During use the appliance becomes hot. Care should be taken

to avoid touching heating elements inside the oven.

Warning: Accessible parts may become hot during use. Young children should be kept away.

Do not use harsh abrasive cleaners or sharp metal scrapers to clean the oven door glass since they can scratch the surface, which may result in shattering of the glass.

Warning: Ensure that the appliance is switched off before replacing the lamp to avoid the possibillity of electric shock.

You should not use steam cleaning devices to clean the appliance.

During the pyrolytic oven cleaning process the oven chamber can reach a very high temperature. Consequently, the appliance outer surfaces can heat up more than usual, so keep children away at all times.

Danger of burns! Hot steam may escape when you open the oven door. Be careful when you open the oven door during or after cooking. Do NOT lean over the door when you open it. Please note that depending on the temperature the steam can be invisible.

Caution: The cooking process has to be supervised. A short term cooking process has to be supervised continuously.

Warning: Use only hob guards designed by manufacturer of the cooking appliance or indicated by the manufacturer of the appliance in the instructions for use as suitable or hob guards incorporated in the appliance. The use of inappropriate guards can cause accidents.

SAFETY INSTRUCTIONS

- Always keep children away from the cooker.
  While in operation direct contact with the cooker may cause burns!
- Ensure that small items of household equipment, including connection leads, do not touch the hot oven or the hob as the insulation material of this equipment is usually not resistant to high temperatures.
- Do not leave the cooker unattended when frying. Oils and fats may catch fire due to overheating or boiling over.
- Do not allow the hob to get soiled and prevent liquids from boiling over onto the surface of the hob. This refers in particular to sugar which can react with the ceramic hob and cause irreversible damage. Any spillages should be cleaned up as they happen.
- Do not place pans with a wet bottom on the warmed up heating zones as this can cause irreversible changes to the hob (irremovable stains).
- Use pans that are specified by the manufacturer as designed for use with a ceramic hob.
- If any defects, deep scratches, cracks or chips appear on the ceramic hob, stop using the cooker immediately and contact the service centre.
- Do not switch on the hob until a pan has been placed on it.
- Do not use pans with sharp edges that may cause damage to the ceramic hob.
- Do not look directly at the halogen heating zones (not covered by a pan) when they are warming up.
- Do not put pans weighing over 15 kg on the opened door of the oven and pans over 25 kg on the hob.
- Do not use harsh cleaning agents or sharp metal objects to clean the door as they can scratch the surface, which could then result in the glass cracking.
- Do not use the cooker in the event of a technical fault. Any faults must be fixed by an appropriately qualified and authorised person.
- In the event of any incident caused by a technical fault, disconnect the power and report the fault to the service centre to be repaired.
- Never allow children to remain unattended near the cooktop nor to play with the control panel.
- **People with life function support implants (such as a heart pacemaker, an insulin pump, or a hearing aid) must make sure that the operation of these devices is not disturbed by the induction plate (induction plate frequency range is 20 to 50 kHz).**
- The appliance has been designed only for cooking. Any other use (for example for heating) does not comply with its operating profile and may cause danger.

HOW TO SAVE ENERGY

Using energy in a responsible way not only saves money but also helps the environment. So let's save energy! And this is how you can do it:

- **Use proper pans for cooking.**

Pans with thick, flat bases can save up to 1/3 on electric energy. Remember to cover pans if possible otherwise you will use four times as much energy!

- **Match the size of the saucepan to the surface of the heating zone.**

A saucepan should never be smaller than a heating zone.

- **Ensure heating zones and pan bases are clean.**

Soils can prevent heat transfer – and repeatedly burnt–on spillages can often only be removed by products which cause damage to the environment.

- **Do not uncover the pan too often (a watched pot never boils!).**

Do not open the oven door unnecessarily often.

Switch off the oven in good time and make use of residual heat.

For long cooking times, switch off heating zones 5 to 10 minutes before finishing cooking. This saves up to 20% on energy.

Only use the oven when cooking larger dishes.

Meat of up to 1 kg can be prepared more economically in a pan on the cooker hob.

- **Make use of residual heat from the oven.**

If the cooking time is greater than 40 minutes switch off the oven 10 minutes before the end time.

Important! When using the timer, set appropriately shorter cooking times according to the dish being prepared.

- **Only grill with the ultrafan after closing the oven door.**
- **Make sure the oven door is properly closed.**

Heat can leak through spillages on the door seals. Clean up any spillages immediately.

- **Do not install the cooker in the direct vicinity of refrigerators/freezers.**

Otherwise energy consumption increases unnecessarily.

UNPACKING

During transportation, protective packaging was used to protect the appliance against any damage. After unpacking, please dispose of all elements of packaging in a way that will not cause damage to the environment.
All materials used for packaging the appliance are environmentally friendly; they are 100% recyclable and are marked with the appropriate symbol.

Caution! During unpacking, the packaging materials (polythene bags, polystyrene pieces, etc.) should be kept out of reach of children.

DISPOSAL OF THE APPLIANCE

Old appliances should not simply be disposed of with normal household waste, but should be delivered to a collection and recycling centre for electric and electronic equipment. A symbol shown on the product, the instruction manual or the packaging shows that it is suitable for recycling.

Materials used inside the appliance are recyclable and are labelled with information concerning this. By recycling materials or other parts from used devices you are making a significant contribution to the protection of our environment.

Information on appropriate disposal centres for used devices can be provided by your local authority.

DESCRIPTION OF THE APPLIANCE

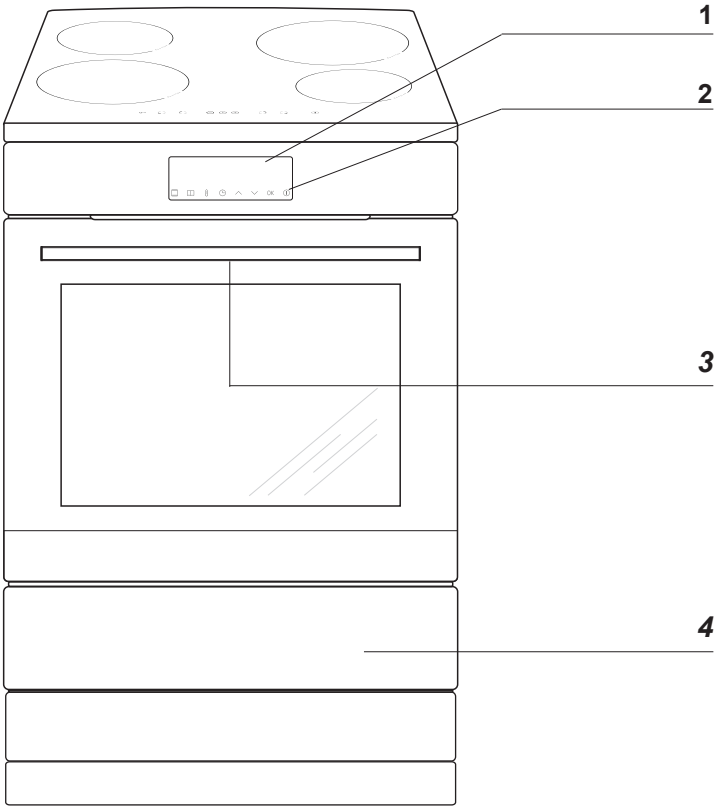

1 Control Panel
2 On / off switch
3 Oven door handle
4 Drawer

DESCRIPTION OF THE APPLIANCE

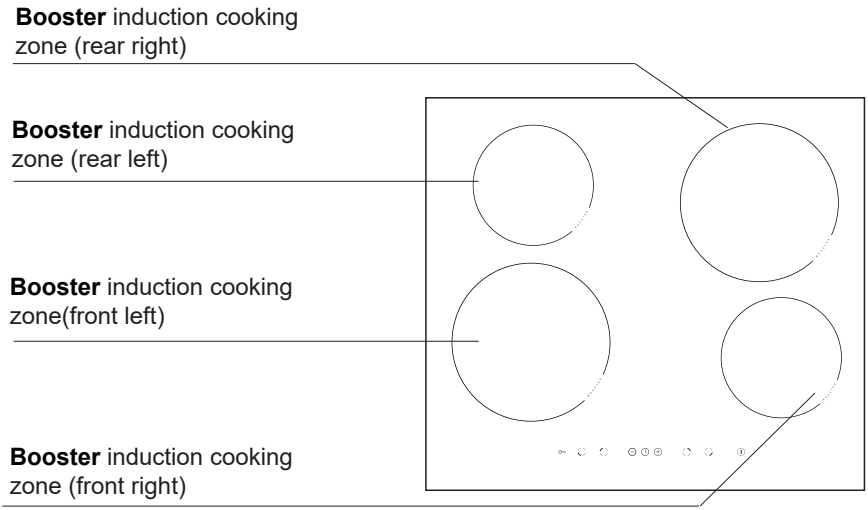

Control Panel

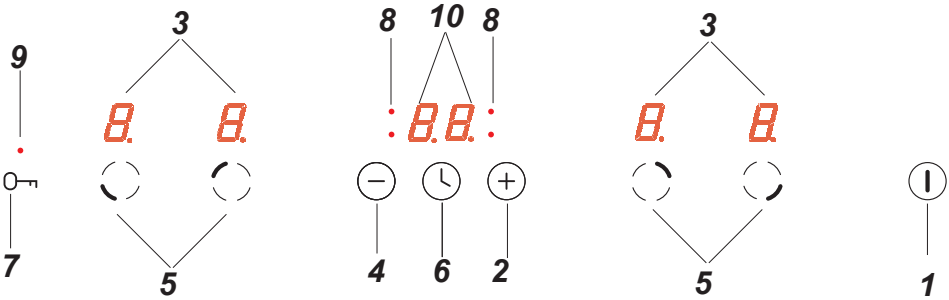

1. On/off sensor
2. Higher heat setting selector
3. Cooking zone indicator
4. Lower heat setting selector
5. Cooking zone selection sensor
6. Timer sensor
7. Child lock sensor
8. Timer indicator light
9. Child lock indicator light
10. Timer display

SPECIFICATIONS OF THE APPLIANCE

Cooker fittings:

Grill grate
(drying rack)

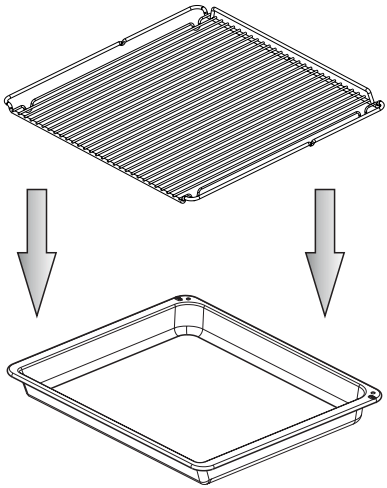

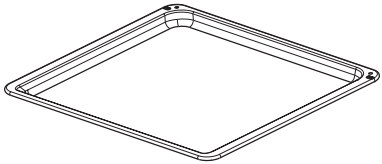

Baking tray

Roasting tray

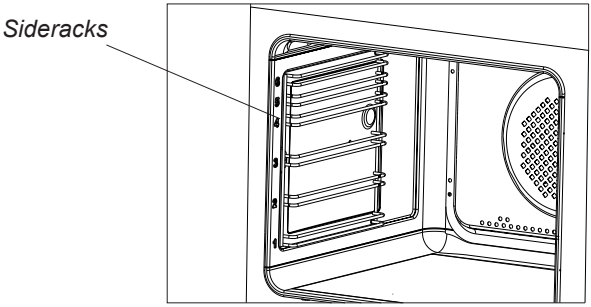

Installing the cooker

- The kitchen should be dry and airy and have effective ventilation according to the existing technical provisions.

- The room should be equipped with a ventilation system that pipes away exhaust fumes created during combustion. This system should consist of a ventilation grid or hood. Hoods should be installed according to the manufacturer's instructions. The cooker should be placed so as to ensure free access to all control elements.
- Coating or veneer used on fitted furniture must be applied with a heat resistant adhesive (100°C). This prevents surface deformation or detachment of the coating. If you are unsure of your furniture's heat resistance, you should leave approximately 2 cm of free space around the cooker. The wall behind the cooker should be resistant to high temperatures. During operation, its back side can warm up to around 50°C above the ambient temperature.

- The cooker should stand on a hard, even floor (do not put it on a base).

- Before you start using the cooker it should be leveled, which is particularly important for fat distribution in a frying pan. To this purpose, adjustable feet are accessible after removal of the drawer. The adjustment range is +/- 5 mm.

Mounting the overturning prevention bracket.

The bracket is mounted to prevent overturning of the cooker. When the overturning prevention bracket is installed, a child who climbs on the oven door will not overturn the appliance.

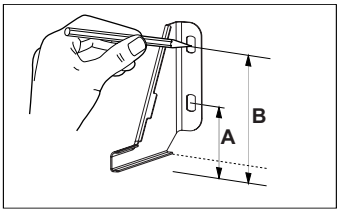

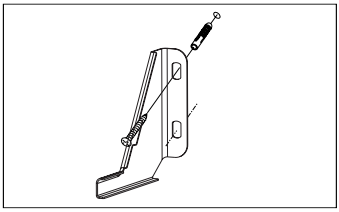

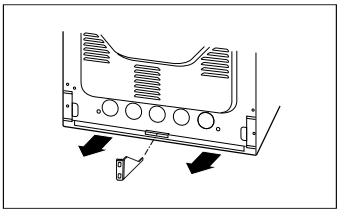

Cooker, height 900 mm
A=123 mm
B=166 mm

INSTALLATION

Important:
Whilst every care is taken to eliminate burrs and raw edges from this product, please take care when handling - we recommend the use of protective gloves during installation.

Installation information

The cooker is designed to be connected to three-phase 400V 3N~50Hz mains power supply. Before connecting the appliance to the mains power supply, the user must ensure that the mains data corresponds to the information given on the manufacturer's data plate, which can be found on either the back or the right-hand side of the cooker.
Before connecting the cooker to the power supply, it is important that you read the information given below.

Connecting the cooker to the mains

- Installation must only be carried out by an authorised electrician. This will ensure that the applicable regulations in the “Heavy Current Regulation” are complied with.
- The installation must comply with any special requirements issued by the local electricity supply company.
- The cooker must be connected to a separate power supply circuit.
- Adapting the cooker to operate with two-phase 400V 2N~50Hz mains power supply is posible by apriopriate bridging in the connection box.
- The connection must only be established according to the connection diagrams below.

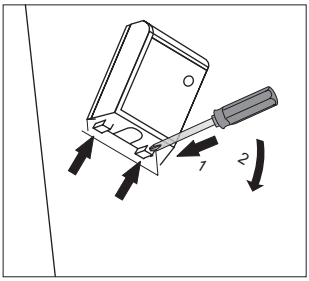

Important: To ensure compliance with the applicable safety requirements, a switch must be fitted which isolates all terminals and has a contact distance of at least 3 mm. (Can be a master switch).	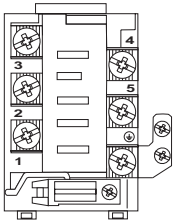	Type of power supply cable
For 400V 2N~50Hz two-phase connection with a neutral conductor, terminals 2-3 are bridged and terminals 4-5 are bridged, individual phase conductors are connected to terminals 1 and 2-3 respectively, neutral conductor is connected to bridged terminals 4-5, and the protective earth conductor is connected to the earthing terminal ⏚.	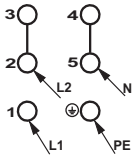	H05VV-F4G4 4x 4 mm^2
For 400V 3N~50Hz three-phase connection with a neutral conductor, terminals 4-5 are bridged, individual phase conductors are connected to terminals 1, 2, and 3 respectively, neutral conductor is connected to bridged terminals 4-5, and the protective earth conductor is connected to the earthing terminal ⏚.	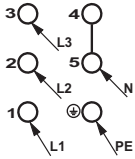	H05VV-F5G1,5 5x 1,5 mm^2
L1, L2, L3 - Live wires; N - Neutral wire; PE - Earth wire The arrows in the above diagrams indicate where you need to connect the individual cable wires.		

Before first use

- Remove all packaging elements, particularly those protecting the interior of the oven chamber during transport.
- Remove all the accessories from inside of the oven and wash them thoroughly in warm water with gentle washing up liquid.
- Remove the protective foil from the surfaces of the telescopic runners.
- Use warm water with the addition of mild detergent to wash the inside of the chamber. Do not use hard brushes or sponges. They could damage the coating of the inside of the chamber.
- After cleaning, heat the oven with top and bottom heater to 250°C for approx. 30 minutes. The smell produced by heating the oven is harmless but still you should ventilate.

Control Panel

On/off switch ⏻ is on the right side of the display. To activate the On/off switch, touch the glass in the place indicated by a pictogram. An acoustic signal will be heard, which was selected in the menu. (See section: *Control panel).*

Touch sensor surfaces must be kept clean.

Child safety lock

Oven door features a child safety lock device that prevents children from opening of the door. The appliance is supplied by the manufacturer with the door safety lock device engaged.

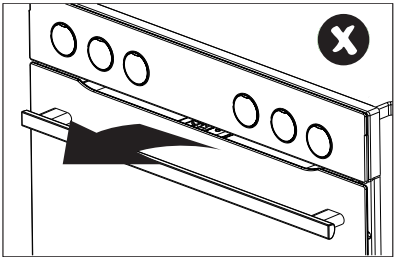

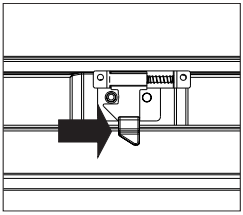

Release the child safety lock.

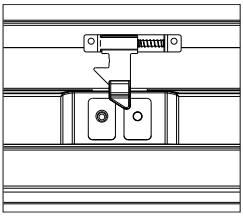

The lock is released and you can open the door.

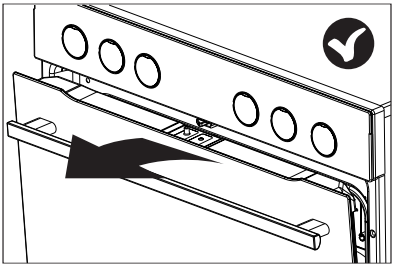

The child safety lock is re-engaged once you close the door.

OPERATION

Control Panel

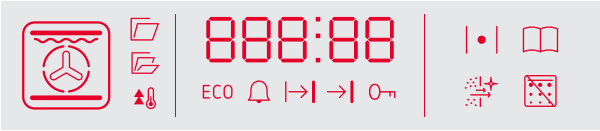

The Electronic programmer is equipped with an LED display and 8 touch sensors (the sensors are not illuminated):

Sensors	Description	Sensors	Description
	On / off switch (Standby mode)		Clock setting
	Oven functions		Plus / up [+]
	Pre-set programmes		minus / down [–]
	Temperature of the setting	OK	- Confirm

Note: You will hear a beep each time you touch a sensor. It is not possible to turn off the acoustic beeps.

Oven function pictograms on the display

The pictograms on the display indicate the following oven functions:

	Oven lighting		Turbo grill
	Quick oven pre-heat		Super grill
ECO	ECO heating		Pizza
	Fan assisted heating		Browning
	Conventional heating		Roasting
	Cake		Defrosting
	Grill		This function depends on the model

Active functions*

- Meat probe connected
- Lighting on
- AutoDoor Open (unavailable)
- AutoDoor Open (unavailable)
- Quick pre-heat
- ECO active
- Kitchen Timer active
- Delayed timed operation
- Timed operation
- Child Lock Active
- Oven pre-heat active
- Pre-set programme active
- Catalytic cleaning active
- Door lock and pyrolytic cleaning active (oven with pyrolytic cleaning)

* depending on model

Connect the power supply

When you connect the power supply (or power is restored after a power outage) the appliance will prompt to set the current time, 00 will flash on the display. You must set the current time to use the appliance.
Note: In the event of a power outage, all settings such as Duration, Temperature and Heating Function will be lost. You will need to re-enter the settings to continue cooking. If the pyrolytic cleaning is interrupted (or the door is locked for any other reason), the oven will start the cooling and door opening procedure before you can set the time.

Set the current time

When you connect the appliance to the power supply, the minutes 00 flash on the display. Use ∧ and ∨ to set the current time. Touch ◷ once to switch to the hour digits and then use ∧ and ∨ to set the current time. Touch ◷ again to confirm the current time. You will hear a beep when the current time is stored in the appliance. To change the current time in the Standby mode, touch and hold ◷. The 🔔 symbol will be show on the display. Touch the ◷ sensor once again and the digits will start to flash. Now you can proceed to set the current time.

The display brightness.

The LED display brightness varies depending on the time of day. The display is dimmed during 22:00 to 06:00 and its brightness is normal during 06:00 to 22:00. Also, the display is brighter when active than when the appliance is in Standby mode. The display brightness and display dimming times cannot be changed.

Lighting

The lighting turns on each time you open the oven door. The lighting also turns on when the oven is in active mode. This lighting is off in Standby mode. If the oven door remains open for a long time, the lighting will automatically turn off after about 10 minutes.

Cooling fan

Cooling fan operates independently of the set functions and the appliance mode. The cooling fan activates automatically when

any function is activated. The cooling fan operates as long as the oven cavity temperature exceeds 80°C. Below this temperature, the cooling fan turns off.

Oven pre-heat (Thermostat symbol)

The | • | pictogram indicates that at least one of the heaters in the oven operates. This pictogram goes out when the set temperature in the oven cavity is reached. Then the pictogram will be on and off periodically. This indicates that the set temperature is maintained. If you lower the set temperature, the | • | pictogram will only light up when the oven cavity cools below the newly set temperature.

Oven functions

When the appliance is on, touch ▭ to access the oven functions menu – the oven function marked “1” will be shown on the display. Use the ∧ and ∨ sensors to select the function from the table below. Then touch OK to confirm your selection. Then use ∧ and ∨ to set the temperature or leave the default temperature. Touch OK to confirm and the appliance will start cooking.

Function Description		Oven elements						Temperature [°C]		Default temperature [°C]
		Lighting	Top heater	Roaster heater	Fan heater	Bottom heater	Fan	min.	max	
	Lighting	√						-	-	-
	Quick oven pre-heat	√		√	√		√	30	280	170
ECO	ECO heating				√		√	30	280	170
	Fan assisted heating	√			√		√	30	280	170
	Conventional	√	√			√		30	280	180
	Cake	√	√			√	√	30	280	170
	Grill	√		√				30	280	220
	Turbo grill	√	√	√			√	30	280	190
	Super grill	√	√	√				30	280	220

	Pizza	√			√	√	√	30	280	220
	Roasting	√				√		30	240	200
	Defrosting	√					√	-	-	-
	Steam Cleaning*	√								
	Pyrolytic cleaning*	√								

* depending on model
Note: When use do not use any sensors in oven function menu for 10 seconds, the appliance will exit the menu and any unconfirmed settings will be lost.

When and oven function is active.

Touch and hold the sensor to change the active oven function.
Touch and hold the sensor to access the pre-set functions menu.
Touch and hold the sensor to enter the Standby mode.
Touch and hold the sensor to adjust the temperature. Then use the and sensors to set the new temperature and touch OK to confirm or simply wait a few seconds.

Standby mode

In this mode the current time or the temperature inside the oven cavity (if above 50°C) is shown on the display. You can also activate the Kitchen Timer, please read on for a detailed description. The display is dimmed in this mode.

Operation.

Touch and hold in the Standby mode to activate the appliance. In this mode can select the functions, temperature or Duration.

Child Lock

Simultaneously touch and hold for 3 seconds the and sensors to activate the child lock. The symbol will be shown on the display. Simultaneously touch and hold the same sensors for 3 seconds to deactivate the Child Lock. The symbol will go off on the display.

Kitchen Timer

Touch and hold the sensor in any mode and 00:00 will be shown on the display and will flash. Now you can:

Use to set the Kitchen Timer and then touch OK to confirm.
Use and to adjust the Kitchen Timer setting. Touch OK to confirm the adjusted setting.
To deactivate the Kitchen Timer, use to adjust the value down to :00 and touch OK to confirm.

The Kitchen Timer operates independently of any active oven functions. When the set time has elapsed, you will hear beeping. Touch

any sensor to mute the beeping.

Preview and modify settings during oven operation

Touch once to check the temperature inside the oven cavity. Touch again to check the set temperature. Touch again to displaying the current time.

To adjust the set temperature, touch and hold and the currently set temperature will be displayed. Use and to adjust it as needed. Touch OK to confirm the new temperature. The new temperature is not set until confirmed.

To change the oven function during oven operation, touch and hold the sensor and currently set oven function will be displayed. Use and to select a new oven function. When you confirm the new function, the temperature will be displayed (currently set temperature, not the default temperature for a given oven function). Use and to adjust the temperature as needed. Touch OK to confirm and the appliance will operate with the new settings.

End oven function

Touch and hold to end the oven function. By default the oven functions operate indefinitely, but you can set the oven to turn off using timed operation function of delayed timed operation function. The only exception is the pyrolytic cleaning function, which cannot be modified.

Timed operation

In this mode the oven will turn off after a set duration. You can set the duration from 1 minute to 10 hours. To set timed operation for any oven function, touch and hold the sensor, and the timer symbol flashes in the display. Touch the sensor again, the display will show the symbol. Now you can:

Use to set the duration and touch OK to confirm.
Use and to adjust the time settings. Touch OK to confirm the adjusted setting.
To cancel timed operation use to adjust duration down to 00:00 and touch OK to confirm.

Timed operation will interrupt the active oven function. When the set Duration has elapsed, you will hear beeping. Touch any sensor except to mute the beeping. When the beeping is muted the appliance enters the operation mode.

Note: When you use the sensor to mute the beeping, the appliance will allow you to adjust the Duration time.

Delayed timed operation

You can set the oven to start at a specific time and operate for a set Duration. You can delay the oven start from 1 minute to 10 hours, and set the Duration for up to 10 hours. To activate the delayed timed operation, first set the timed operation. Then touch and hold the sensor again and the timer symbol will flash on the display. Touch the sensor twice, and the pictogram will flash on the display. Now you can:

Use to set the time for the oven to turn off and then touch OK to confirm.
Correct the oven on time with the sensors and . Touch OK to confirm the adjusted setting.
To cancel timed operation use to adjust duration down to the lowest possible value and touch OK to confirm.
Timed operation will interrupt the active oven function. When the set time has elapsed, you

will hear beeping. Touch any sensor to mute the beeping. When the beeping is muted the appliance enters the operation mode.

Pre-set programmes

These are programmes with specific settings of function, temperature and duration that are most suitable for a given dish. When the appliance is on, touch to access the pre-set programmes menu – the pre-set programme “P01” will be shown on the display. Use the ∧ and ∨ sensors to select the pre-set programme from the table below. Then touch OK to confirm your selection and the appliance will start to operate.

Programme	Description	Active		Default temperature [°C]
		Quick oven pre-heat	Heating function	
P01	Beef			180
P02	Pork			180
P03	Lamb			180
P04	Chicken 1.5 kg			190
P05	Duck 1.8 kg			180
P06	Goose 3.0 kg			170
P07	Turkey 2.5 kg			170
P08	Pizza			220
P09	Lasagne			200
P10	Focaccia			230
P11	Casserole with pasta			220
P12	Baked vegetables			180
P13	Sponge cake			160
P14	Muffins			160
P15	Cookies			150
P16	Fruitcake			175
P17	Bread			180
P18	Dough proving			30
P19	Dry			50

All pre-set programmes can be freely modified – you can adjust temperature or duration. To do this, follow the relevant instructions (“Preview and modify settings during oven operation” and “Timed operation”). When you make any adjustments, the stored pre-set programme is not affected and the original settings will be restored the next time you select a pre-set programme.

Pre-set programmes with quick pre-heat

Some pre-set programmes require the oven to be pre-heated. They are marked accordingly in the above table. When you select a pre-set programme with pre-heating and touch OK to confirm, the quick pre-heat pictogram will be displayed. When the set temperature is reached, you will hear beeping, which will turn off when you open the oven door. Place the food in the oven and close the door, at which point the actual pre-set programme will start.

Note: It is inadvisable to modify a pre-set programme during the quick pre-heat phase as this will cancel pre-set programme and the appliance will operate with the currently set function, duration and temperature.

End a pre-set programme.

When a pre-set programme ends, you will hear beeping.

Oven door

Oven door must be closed during operation. When you open the door you will interrupt the active oven function. If the door remains open for more than 30 seconds, an acoustic signal will sound to prompt you to close the oven door. Touch any sensor or close the oven door to mute the beeping.
If you open the door for less than 10 minutes the active settings are unaffected. For safety reasons, after this time, the oven enters the standby mode (all settings are cleared).

Limit the oven operating time

For safety reasons, the oven operation is time limited. If the set temperature is up to 100°C, the oven will enter Standby mode after 10 hours, and if the set temperature is 200°C and more, the oven operation is limited to 3 hours. In the temperature range of 101°C to 199°C, the operation time is limited proportionally between 3 and 10 hours.

Quick pre-heat

In order to quickly pre-heat the oven, the fan, fan heater and the roaster are on, and the appliance operates at it maximum power of 3.6 kW.

Active SmellCatalyst

The catalyst largely removes the odours emitted from the oven during baking or cleaning. Touch and hold and at any time to activate this function (unavailable: Quick pre-heat, Lighting, ECO heating). The pictogram will be displayed. This function is not automatically resumed when the current programme ends.

Pyrolytic cleaning

The pyrolytic cleaning function is a special programme with additional requirements. When you select the pyrolytic cleaning, the display shows the pictogram. Touch OK to confirm and you can use ∨ ∧ to select duration of 2 hours, 2.5 hours or 3 hours. Touch OK to confirm and the pyrolytic cleaning will start. The oven door must be closed. When the pyrolytic cleaning starts, the oven door is locked for the duration of the cleaning programme and until the oven cavity has cooled to a safe temperature.

Note:

- If the door is still open when you confirm the duration of the pyrolytic cleaning, the door lock icon on the display will flash. If you do not close the door within 10 seconds, the pyrolysis cleaning will be aborted.
- Before using this function, read the chapter on cleaning, in particular the basic information on the pyrolytic cleaning.
- In the oven cavity temperature can exceed 480°C – make sure that there are no children near the appliance.
- The door will be unlocked when the temperature inside the oven cavity cools down to 150°C (the door lock symbol will disappear from the display).
- You cannot change the duration of pyrolytic cleaning already in progress.
- Touch ⏻ to abort the pyrolytic cleaning. When you abort the pyrolytic cleaning, the oven door will only unlock when the oven cavity has cooled down to a safe temperature.
- If there is a power outage during the pyrolytic cleaning and then power is restored, the appliance will start the cooling down process and then the oven door will only unlock when the oven cavity has cooled down to a safe temperature.
- During pyrolytic cleaning, the catalyst function is enabled by default. Touch and hold and to turn it off.

OPERATION

Before using the appliance for the first time

- thoroughly clean your induction hob first. The induction hob should be treated with the same care as a glass surface.
- switch on the ventilation in the room or open a window, as the appliance could emit an unpleasant smell during first use.
- operate the appliance while observing all safety guidelines.

Induction cooking zone operation principle

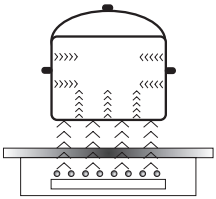

Electric oscillator powers a coil placed inside the appliance. This coil produces a magnetic field, which induces eddy currents in the cookware.
These eddy currents induced by the magnetic field cause the cookware to heat up.

This requires the use of pots and pans whose base is ferromagnetic, in other words susceptible to magnetic fields.

Overall, induction technology is characterized by two advantages:
- the heat is only emitted by the cookware and its use is maximised,
- there is no thermal inertia, since the cooking starts immediately when the pot is placed on the hob and ends once it is removed.

Certain sounds can be heard during normal use of the induction hob, which do not affect its correct operation.

- Low-frequency humming. This noise arises when the cookware is empty and stops when water is poured or food is placed in the cookware.
- High-frequency whizz. This noise arises in cookware made of multiple layers of different materials at maximum heat setting. The noise intensifies when using two or more cooking zones at maximum heat setting. The noise will stop or reduce when heat setting is reduced.
- Creaking noise. This noise arises in cookware made of multiple layers of different materials. The noise intensity depends on how the food is cooked.
- Buzzing. Buzzing can be heard when electronics cooling fan operates.

The noises that can be heard during the normal appliance operation are the result of the cooling fan operation, cooking method, cookware dimensions, cookware material and the heat setting. These noises are normal and do not indicate a fault.

The protective device:
If the hob has been installed correctly and is used properly, any protective devices are rarely required.
Fan: protects and cools controls and power components. It can operate at two different speeds and is activated automatically. Fan runs until the electronic system has sufficiently cooled down regardless of the appliance or the cooking zones being turned on or off.
Temperature sensor: Temperature of electronic circuits is continuously monitored by a temperature sensor. If temperature is raised beyond a safe level, this protection system will reduce cooking zone heat setting or shut down the cooking zones adjacent to the overheated electronic circuits.
Pan detection: allows the hob to detect pans placed on a cooking zone. Small objects placed on the cooking zone (eg, spoon, knife, ring ...) will not be recognised as pans and the hob will not operate.

Pan detector

Pan detector is installed in induction hobs. Pan detector starts heating automatically when a pan is detected on a cooking zone and stops heating when it is removed. This helps save electricity.
- When an suitable pan is placed on a cooking zone, the display shows the heat setting.
- Induction requires the use of suitable cookware with ferromagnetic base (see Table).

If a pan is not placed on a cooking zone or the pan is unsuitable, the symbol is displayed. The cooking zone will not operate. If a pan is not detected within 10 minutes, the cooking zone will be switched off.
Switch off the cooking zone using the touch control sensor field rather than by removing the pan.

Pan detector does not operate as the on/off sensor.

The induction hob is equipped with electronic touch control sensor fields, which are operated by touching the marked area with a finger.
Each time a sensor field is touched, an acoustic signal can be heard.

When switching the appliance on or off or changing the heat setting, attention should be paid that only one sensor field at a time is touched. When two or more sensor fields are touched at the same time (except timer and child lock), the appliance ignores the control signals and may trigger a fault indication if sensor fields are touched for a long time.
When you finish cooking switch off the cooking zone using touch control sensor fields and do not rely solely on the pan detector.

It is not recommended to pull pots out from cooking zones toward the front of the hob, as this may damage the control panel

OPERATION

The high-quality cookware is an essential condition for efficient induction cooking.

Select cookware for induction cooking

Cookware characteristics.

- Always use high quality cookware, with perfectly flat base. This prevents the formation of local hot spots, where food might stick.Pots and pans with thick steel walls provide superior heat distribution.
- Make sure that cookware base is dry: when filling a pot or when using a pot taken out of the refrigerator make sure its base is completely dry before placing it on the cooking zone. This is to avoid soiling the surface of the hob.
- Lid prevents heat from escaping and thus reduces heating time and lowers energy consumption.
- To determine if cookware is suitable, make sure that its base attracts a magnet.
- **Cookware base has to be flat for optimal temperature control by the induction module.**
- **The concave base or deep embossed logo of the manufacturer interfere with the temperature induction control module and can cause overheating of the pot or pan.**
- **Do not use damaged cookware such as cookware with deformed base due to excessive heat.**
- When you use large ferromagnetic base cookware, whose diameter is less than the total diameter of the cookware, only the ferromagnetic base heats up. This results in a situation where it is not possible to uniformly distribute the heat in the cookware. If the ferromagnetic area is reduced due to inclusion of aluminium parts then the effective heated area can be reduced. Problems with the detection of the cookware could arise or cookware may not be detected at all. To achieve optimum cooking results, the diameter of the ferromagnetic base should match that of the cooking zone. If cookware is not detected in a given cooking zone, it is advisable to try it in a smaller cooking zone.

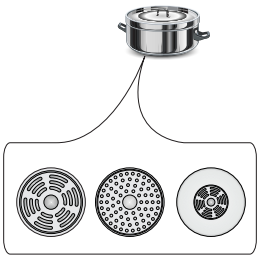

OPERATION

For induction cooking us only ferromagnetic base materials such as:
- enamelled steel
- cast iron
- special stainless steel cookware designed for induction cooking.

Marking of kitchen cookware	**Check for marking indicating that the cookware is suitable for induction cooking.**
	Use magnetic cookware (enamelled steel, ferrite stainless steel, cast iron). The easiest way to determine if your cookware is suitable is to perform the „magnet test". Find a generic magnet and check if it sticks to the base of the cookware.
Stainless Steel	Cookware is not detected
	With the exception of the ferromagnetic steel cookware
Aluminium	Cookware is not detected
Cast iron	High efficiency
	Caution: cookware can scratch the hob surface
Enamelled steel	High efficiency
	Cookware with a flat, thick and smooth base is recommended
Glass	Cookware is not detected
Porcelain	Cookware is not detected
Cookware with copper base	Cookware is not detected

The smallest useful diameter of cookware for a cooking zone:

Cooking zone diameter	**The minimum diameter of the bottom of an enamelled steel cookware**
(mm)	**(mm)**
160 - 180	110
180 - 200	
210 - 220	125
220 x 190	
260 - 280	

The minimum diameter of cookware made of materials other than enamelled steel may vary.

OPERATION

Control Panel

- Immediately after the appliance is connected to electrical mains, all displays will light up briefly. Your induction hob is then ready for use.
- The induction hob is equipped with electronic touch control sensor fields, which are operated by touching with a finger for at least 1 second.
- Touching of a sensor field is accompanied by an acoustic signal to acknowledge.

No objects should be placed on the sensor fields (this could cause an error). Touch sensor fields should be always kept clean.

Switch on the appliance

To switch on the appliance touch and hold the on/off sensor field (**1**) for at least 1 second. All displays (**3**) will show the number "**0**".

If none of the sensor fields is touched within 10 seconds, the appliance switches itself off.

Switch on the cooking zone

Once the appliance is switched on using the on/off touch sensor (**1**), select a cooking zone (**5**) within the next 10 seconds.

1. When a cooking zone selection sensor field (**5**) is touched, "**0**" on the corresponding heat setting indicator display will pulsate.
2. Set the desired heat setting using the "+" (2) or "-" (4) sensor fields.

If none of the sensor fields is touched within 10 seconds of switching on the appliance, the cooking zone switches off.

A cooking zone is active when its display shows a digit or a letter. This indicates the cooking zone is ready for the heat setting to be set or changed.

Selecting the cooking zone heat setting

When the cooking zone display (**3**) shows pulsating “0”, start setting the desired heat setting using the "+" (**2**) or "-" (**4**) sensor field.

OPERATION

Switch off cooking zones

- A given cooking zone must be active. Heat setting display pulsates.
- To switch off a cooking zone touch the on/off sensor field or touch the sensor (**5**) for 3 seconds.

Switch off the appliance

- The appliance operates when at least one cooking zone is on.
- To switch off the appliance touch the on/off sensor (**1**).

If a cooking zone is still hot, the relevant display (**3**) will show the letter "H" to indicate residual heat.

Booster function "P"

The Booster Function increases the nominal power of the Ø 210-220 mm cooking zone from 2000W to 3000W,
Ø 160-180 mm cooking zone from 1200W to 1400W,
In order to activate the Booster function, select the cooking zone, set the heat setting to "9" and then touch the "+" (**2**) sensor field again. The letter "P" will be shown on the display.
To deactivate the Booster function, touch the "-" (**4**) sensor field to reduce the heat setting or lift the cookware from the cooking zone.

For 210-220 mm and 160-180 mm cooking zone, operation of the Booster function is limited to 10 minutes. Once the Booster function is automatically deactivated, the cooking zone continues to operate at its nominal power.
The Booster function can be reactivated, provided the appliance electronic circuits and induction coils are not overheated.
When the pot is lifted from the cooking zone when the Booster function is in operation, it remains active and the countdown continues.

When the appliance electronic circuits or induction coils overheat when the Booster function is in operation, it is automatically deactivated. The cooking zone continues to operate at its nominal power.

OPERATION

Booster function control

Depending on the model, the cooking zones are paired vertically or crosswise. Total power is shared within the paired cooking zones.
If you attempt to enable the Booster function for both cooking zones simultaneously, the maximum power available would be exceeded. In that case the heat setting of the first activated cooking zone will be reduced to the highest level available.

The child lock function

The Child Lock function protects the appliance from inadvertent operation by children. The appliance can be operated once the child lock function has been released.

The Child Lock function can be set when the appliance turned on or off.

Turn Child Lock on/off

Touch and hold sensor (**7**) for 5 seconds to turn Child Lock on/off. Indicator light (**9**) is on when the Child Lock function is on.

The Child Lock function remains set until it is released even after the appliance has been switched off and then switched on again. Disconnecting the appliance from electrical mains deactivates the Child Lock.

Residual heat indicator

Heat energy that remains accumulated in the cooking zone after cooking is called the residual heat. The appliance displays two different levels of residual heat. When a cooking zone temperature is above 60°C and the cooking zone or the appliance is switched off, the relevant cooking zone display will show the letter "H". Residual heat indication is displayed as long as the cooking zone temperature exceeds 60°C. When a cooking zone temperature is between 45°C and 60°C, the relevant cooking zone display will show the letter "h" indicating low residual heat. When a cooking zone temperature is below 45°C the residual heat indication is turned off.

When residual heat indicator is on, do not touch the cooking zone as there is a risk of burns and do not place on it any items sensitive to heat!

During failure of power supply "H" residual heat indicator is not displayed. However, cooking zones may still be hot!

OPERATION

Limiting the operating time

In order to increase efficiency, the induction hob is fitted with a operating time limiter for each of the cooking zones. The maximum operating time is set according to the last heat setting selected.
If you do not change the heat setting for a long time (see table) then the associated cooking zone is automatically switched off and the residual heat indicator is activated. However, you can switch on and operate individual cooking zones at any time in accordance with the operating instructions.

Cooking heat setting	Maximum operating time (hours)
u	8
1	8
2	8
3	5
4	5
5	5
6	1,5
7	1,5
8	1,5
9	1,5
P	0,16

Automatic warm-up function

- Touch sensor (**5**) to activate the selected cooking zone
- Then touch "+" (**2**) or "-" (**4**) to set the desired heat setting in the 1-8 range and then touch sensor (**5**) again.
- The display will alternate between the letter A and the heat setting.

After a certain time of operation at boosted power, the cooking zone switches back to the heat setting set, which will be shown on the display.

Cooking heat setting	The duration of the automatic warm-up function (minutes)
	-
1	0,8
2	1,2
3	2,3
4	3,5
5	4,4
6	7,2
7	2
8	3,2

If a pot is lifted from the cooking zone and replaced before the warm-up countdown is completed, the warm-up function will resume and countdown will continue until completed.

OPERATION

Timer

Timer function makes cooking easier by making it possible to set Duration. It can also be used as a Kitchen Timer.

Set the Timer

Timer function makes cooking easier by making it possible to set Duration. It can also be used as a Kitchen Timer.

- Touch cooking zone selection sensor field (5) to select a cooking zone. The number "0" will pulsate.
- Touch "+" (**2**) or "-" (**4**) sensor field to set the desired heat setting ranging from 1 to 9.
- Then activate timer by touching (**6**) sensor fields within 10 seconds.
- Touch "+" (**2**) or „-" (**4**) sensor field to set the desired cooking time (01 to 99 minutes).
- Timer indicator light (**8**) of a relevant cooking zone will be on.

Timer countdown can be set independently for all cooking zones.

If more than one timer is set the shortest duration is displayed. Timer indicator light (8) of a relevant cooking zone will flash.

Change Timer Duration

Timer Duration setting can be changed at any time.

- Touch cooking zone selection sensor field (**5**) to select a cooking zone. The display will pulsate.
- Then activate timer by touching (**6**) sensor fields within 10 seconds.
- Use "+" (**2**) or "-" (**4**) sensor field to adjust the timer setting.

Check Timer Duration

To check progress of Timer countdown at any time, touch the timer sensor field (**6**). Timer indicator light (**8**) of a relevant cooking zone will flash.

Stop the Timer

When the set time has elapsed an acoustic signal is sounded, which can be muted by touching any sensor field. If no sensor field is touched, the acoustic signal will stop automatically after 2 minutes.

To stop the timer countdown before the set Duration has elapsed:

- Touch cooking zone selection sensor field (**5**) to select a cooking zone. The display will become bright.
- Then touch and hold sensor (**6**) for 3 seconds or adjust duration using the "+" (**2**) or "-" (**4**) down to "00"

Kitchen Timer

When no cooking zones are in use, the Timer function can be used as a regular Kitchen Timer.

Set Kitchen Timer

When the appliance is off:

- Switch on the appliance by touching the on/off sensor (**1**).
- Then touch sensor (**6**) to activate kitchen timer.
- Use "+" (**2**) or "-" (**4**) sensor field to adjust the Kitchen Timer setting.

Stop Kitchen Timer

When the set Duration has elapsed an acoustic signal is sounded, which can be muted by touching any sensor field. If no sensor field is touched, the acoustic signal will stop automatically after 2 minutes.

To stop the timer countdown before the set Duration has elapsed:

- Touch and hold sensor (**6**) for 3 seconds or adjust duration using the "+" (**2**) or "-" (**4**) down to "00"
- Kitchen Timer function does not affect cooking zone operation.

Kitchen timer is reset when the timer function is activated.

Keeping food warm

Keep warm function allows for keeping food warm on a cooking zone. The selected cooking zone operates at a low heat setting. Cooking zone's heat setting is automatically adjusted so that food temperature is kept at a temperature of about 65°C. Thanks to this, ready to serve, warm food retains its taste and does not stick to the pot's bottom. This function can be also used to melt butter or chocolate.
For the keep food warm function to operate correctly, use a flat base pot or frying pan, so that base temperature is accurately measured by the temperature sensor fitted in the cooking zone.
The Keep Warm function can be activated for any cooking zone.
Due to a risk of the growth of microorganisms, it is not recommended to keep food warm for a long time, so the Keep Warm function is switched off after 2 hours.

Keep warm setting is an additional heat setting available between **"0" and "1"** and is indicated on the display as "L/ ".

Keep warm setting is activated in the same way as described in the section
Switch on the cooking zone
Keep warm setting is deactivated in the same way as described in the section
Switch off cooking zones

BAKING IN THE OVEN – PRACTICAL HINTS

Baking

- we recommend using the baking trays which were provided with your cooker;
- it is also possible to bake in cake tins and trays bought elsewhere which should be put on the drying rack; for baking it is better to use black trays which conduct heat better and shorten the baking time;
- shapes and trays with bright or shiny surfaces are not recommended when using the conventional heating method (top and bottom heaters), use of such tins can result in undercooking the base of cakes;
- when using the ultra-fan function it is not necessary to initially heat up the oven chamber, for other types of heating you should warm up the oven chamber before the cake is inserted;
- before the cake is taken out of the oven, check if it is ready using a wooden stick (if the cake is ready the stick should come out dry and clean after being inserted into the cake);
- after switching off the oven it is advisable to leave the cake inside for about 5 min.;
- temperatures for baking with the ultra-fan function are usually around 20 – 30 degrees lower than in normal baking (using top and bottom heaters);
- the baking parameters given in Table are approximate and can be corrected based on your own experience and cooking preferences;
- if information given in recipe books is significantly different from the values included in this instruction manual, please apply the instructions from the manual.

Roasting meat

- cook meat weighing over 1 kg in the oven, but smaller pieces should be cooked on the gas burners.
- use heatproof ovenware for roasting, with handles that are also resistant to high temperatures;
- when roasting on the drying rack or the grate we recommend that you place a baking tray with a small amount of water on the lowest level of the oven;
- it is advisable to turn the meat over at least once during the roasting time and during roasting you should also baste the meat with its juices or with hot salty water – do not pour cold water over the meat.

BAKING IN THE OVEN – PRACTICAL HINTS

ECO Heating

- ECO Heating an optimised heating function designed to save energy when preparing food.
- You cannot reduce the cooking time by setting a higher temperature; preheating the oven is not recommended.
- Do not change the temperature setting and do not open the oven door during cooking.

Recommended setting for ECO Heating

Type of dish	Oven functions	Temperature (°C)	Level	Time in minutes
Sponge cake	ECO Eco	180 - 200	2 - 3	50 - 70
Yeast cake/ Pound cake	ECO Eco	180 - 200	2	50 - 70
Fish	ECO Eco	190 - 210	2 - 3	45 - 60
Beef	ECO Eco	200 - 220	2	90 - 120
Pork	ECO Eco	200 - 220	2	90 - 160
Chicken	ECO Eco	180 - 200	2	80 - 100

BAKING IN THE OVEN – PRACTICAL HINTS

Oven with automatic air circulation (including a fan and ring heater)

Type of dish	Type of heating	Temperature (°C)	Level	Time (min.)
Sponge cake		160 - 200	2 - 3	30 - 50
Yeast cake/ Pound cake		160 - 170 [1)]	3	25 - 40 [2)]
Yeast cake/ Pound cake		155 - 170 [1)]	3	25 - 40 [2)]
Pizza		200 - 230 [1)]	2 - 3	15 - 25
Fish		210 - 220	2	45 - 60
Fish		160 - 180	2 - 3	45 - 60
Fish		190	2 - 3	60 - 70
Sausages		200 - 220	4	14 - 18
Beef		225 - 250	2	120 - 150
Beef		160 - 180	2	120 - 160
Beef		180 - 190	2	100 - 150
Pork		160 - 230	2	90 - 150
Pork		160 - 190	2	90 - 150
Pork		180 - 190	2	100 - 150
Chicken		180 - 190	2	70 - 90
Chicken		160 - 180	2	45 - 60
Chicken		175 - 190	2	60 - 70
Vegetables		190 - 210	2	40 - 50
Vegetables		170 - 190	3	40 - 50

The times are apply to dish that is placed into a cold oven. For the preheated oven, the times should be reduced by about 5-10 minutes.

[1)] Preheat

[2)] Baking smaller items

Note: The figures given in Tables are approximate and can be adapted based on your own experience and cooking preferences.

TEST DISHES. According to standard EN 60350-1.

Baking

Type of dish	Accessory	Level	Type of heating	Temperature (°C)	Baking time [2] (min.)
Small cakes	Baking tray	4		160 [1]	29 - 32 [2]
	Baking tray	4		155 [1]	31 - 34 [2]
	Baking tray	3		150 [1]	34 - 37 [2]
	Baking tray Roasting tray	2 + 4 2 - baking tray or roasting tray 4 - baking tray		150 [1]	40 - 43 [2]
Shortbread	Baking tray	3		150 - 160 [1]	30 - 40 [2]
	Baking tray	3		150 - 170 [1]	25 - 35 [2]
	Baking tray	3		150 - 170 [1]	25 - 35 [2]
	Baking tray Roasting tray	2 + 4 2 - baking tray or roasting tray 4 - baking tray		160 - 175 [1]	25 - 35 [2]
Fatless sponge cake	Wire rack + black baking tin diameter 26cm	2		170 - 180 [1]	38 - 46 [2]
Apple pie	Wire rack + 2 black baking tins diameter 20cm	2 black baking tins placed after the diagonal, back right, front left		180 - 200 [1]	50 - 65 [2]

[1] Preheat 5 minutes, do not use Rapid preheat function.

[2] The times are apply to dish that is placed into a cold oven.

TEST DISHES. According to standard EN 60350-1.

Grilling

Type of dish	Accessory	Level	Type of heating	Temperature (°C)	Time (min.)
White bread toast	Wire rack	4		220 [1)]	3 - 7
Beef burgers	Wire rack + roasting tray (to gather drops)	4 - wire rack 3 - roasting tray		220 [1)]	1st side 13 - 18 2nd side 10 - 15

[1)] Preheat for 8 minutes, do not use Rapid preheat function.

Roasting

Type of dish	Accessory	Level	Type of heating	Temperature (°C)	Time (min.)
Whole chicken	Wire rack + roasting tray (to gather drops)	2 - wire rack 1 - roasting tray		180 - 190	70 - 90
	Wire rack + roasting tray (to gather drops)	2 - wire rack 1 - roasting tray		180 - 190	80 - 100

The times are apply to dish that is placed into a cold oven. For the preheated oven, the times should be reduced by about 5-10 minutes.

CLEANING AND MAINTENANCE

By ensuring proper cleaning and maintenance of your cooker you can have a significant influence on the continuing fault-free operation of your appliance.

Before you start cleaning, the cooker must be switched off and you should ensure that all knobs are set to the "●"/"0" position. Do not start cleaning until the cooker has completely cooled.

Ceramic hob

- The hob should be cleaned regularly after each use. If possible, it is recommended that the hob is washed while still warm (after the heating zone indicator goes off). Do not allow the hob to get heavily stained; particualrly from burnt–on spillages from boiled over liquids.
- When cleaning do not use cleaning agents with a strong abbrasive effect, such as e.g. scouring powders containing an abrasive, abrasive compounds, abrasive stones, pumice stones, wire brushes and so on. They may scratch the hob surface, causing irreversible damage.
- Large spillages that are firmly stuck to the hob can be removed by a special scraper; but be careful not to damage the ceramic hob frame when doing this.

Caution! The sharp blade should always be protected by adjusting the cover (just push it with your thumb). Injuries are possible so be careful when using this instrument – keep out of reach of children.

- Appropriate light cleaning or washing products are recommended, such as e.g. any kind of liquids or emulsions for fat removal. If the recommended products are not available, it is advisable to use a solution of warm water with a little washing–up liquid or cleaning products for stainless steel sinks.

Oven

- The oven should be cleaned after every use. When cleaning the oven the lighting should be switched on to enable you to see the surfaces better.
- The oven chamber should only be washed with warm water and a small amount of washing-up liquid.
- After cleaning the oven chamber wipe it dry.

Important!

Do not use any abrasive agents, harsh detergents or abrasive objects for cleaning.

Only use warm water with a small amount of dishwashing liquid to clean the front of the appliance. Do not use washing powders or creams.

Pyrolytic cleaning

Oven pyrolytic self-cleaning. The oven heats up to a temperature of about 480°C.Grilling or baking residue is burnt into an easy to remove ash that can be wiped off with a damp cloth.

Before pyrolytic cleaning.

Important!
Remove all non-pyrolysis accessories of the oven room. This may also apply optional accessories.

- Remove stubborn stains from the oven chamber.
- Clean the outside of the oven with a damp cloth.
- Follow the instructions.

During the cleaning process.

- Do not use the hob.
- Do not turn on the oven lighting.
- The oven door is equipped with a lock, which prevents it from being opened during the cleaning process. Do not open the door so as not to interrupt the cleaning process.

Important!
During pyrolytic cleaning, the oven chamber can reach a very high temperature. Consequently, the outer oven surfaces can heat up more than usual, so keep children away at all times.
Some fumes can be emitted during the cleaning, so make sure the kitchen is well ventilated.

The pyrolytic cleaning process:

- Close the oven door.
- Follow the instructions in the *Pyrolytic cleaning* section.

Important!

If the oven temperature is high (higher than in normal use) the door will not be unlocked. Once the oven cools down, you can open the door and remove the ash with a soft, damp cloth. Replace the wire shelf supports and other accessories. Your oven is ready for use.

- Ovens marked with the letter **D** are equipped with easily removable wire shelf supports. To remove them for cleaning use size 3 Allen key to undo the fixing screws from shelf support holders Once cleaned, replace the shelf supports in oven chamber. Before tightening, make sure the shelf support holders are secure in the holes provided in oven chamber wall.

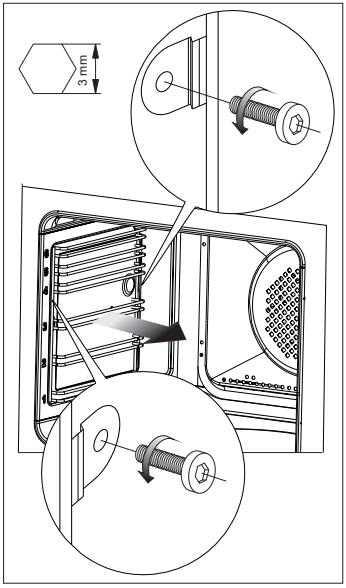

Removing wire shelf supports

The runners should be taken out and washed along with the side racks. Before putting trays on the telescopic runners they should be pulled out (if the oven is warmed up the runners should be pulled out by hooking the back edge of trays on the bumpers in the front part of the telescopic runners) and then insert them together with a tray.

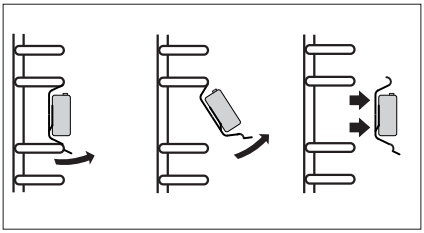

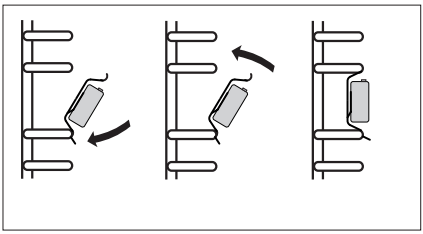

Replacing the halogen bulb in the oven

Before replacing the halogen bulb, make sure the appliance is disconnected from the electric mains to avoid a possible electric shock.

1. Unplug the appliance
2. Remove shelves and trays from the oven.
3. If the oven has telescopic runners, remove them also.
4. Use a flat screwdriver to pry the lamp cover loose, remove it, wash and carefully wipe it dry.
5. Pull the halogen bulb out by sliding it down using a cloth or paper. If necessary, replace the halogen bulb with a new one.
- type G9
- voltage 230V
- power 25W
6. Replace the halogen bulb in its socket.
7. Replace the lamp cover.

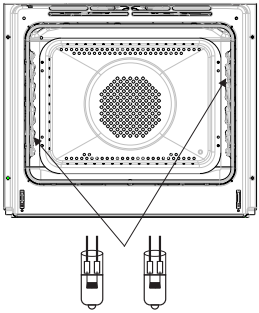

Oven lighting

Door removal

In order to obtain easier access to the oven chamber for cleaning, it is possible to remove the door. To do this, tilt the safety catch part of the hinge upwards (fig. A). Close the door lightly, lift and pull it out towards you. In order to fit the door back on to the cooker, do the inverse. When fitting, ensure that the notch of the hinge is correctly placed on the protrusion of the hinge holder. After the door is fitted to the oven, the safety catch should be carefully lowered down again. If the safety catch is not set it may cause damage to the hinge when closing the door.

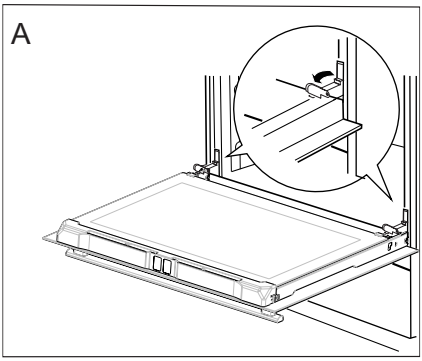

Tilting the hinge safety catches

Removing the inner panel

1. Using a cross-head screwdriver undo the screws in the upper door slat (fig. B).
2. Using a flat screwdriver remove the upper door slat, prying it gently on the sides (fig. B, C).

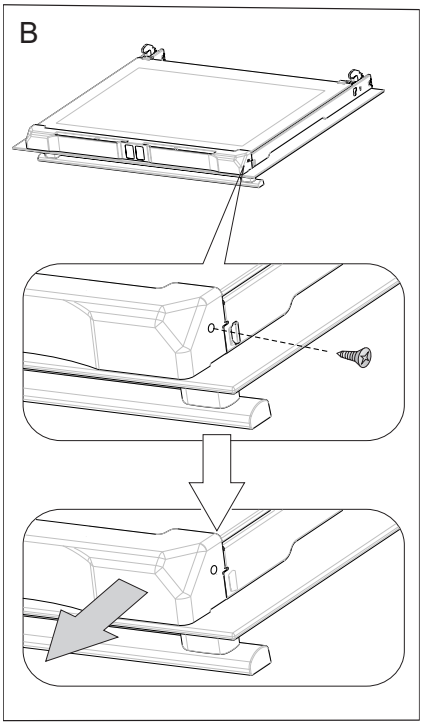

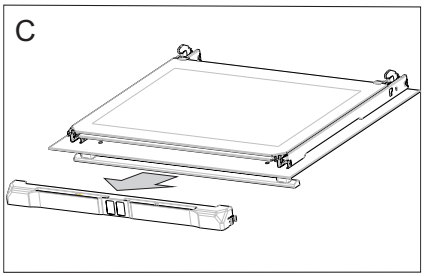

3. Pull the inner glass panel from its seat (in the lower section of the door).
   Important! Risk of damage to glass panel mounting. Do not lift the glass panel up but pull it out.
   Remove the inner panel (fig. D).
4. Clean the panel with warm water with some cleaning agent added.
   Carry out the same in reverse order to reassemble the inner glass panel. Its smooth surface shall be pointed upwards.

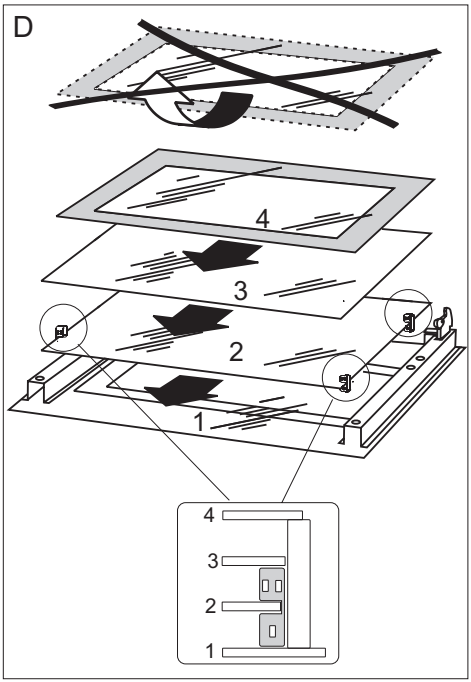

Removal of the internal glass panel

Regular inspections

Besides keeping the cooker clean, you should:

- carry out periodic inspections of the control elements and cooking units of the cooker. After the guarantee has expired you should have a technical inspection of the cooker carried out at a service centre at least once every two years,
- fix any operational faults,
- carry out periodical maintenance of the cooking units of the cooker.

Caution!
All repairs and regulatory activities should be carried out by the appropriate service centre or by an appropriately authorised fitter.

OPERATION IN CASE OF EMERGENCY

In the event of an emergency, you should:

- switch off all working units of the cooker
- disconnect the mains plug
- call the service centre
- some minor faults can be fixed by referring to the instructions given in the table below.

Before calling the customer support centre or the GRAM service centre check the following points that are presented in the table.

PROBLEM	POSSIBLE CAUSE	REMEDY
1.The appliance does not work.	break in power supply	check the household fuse box, if there is a blown fuse replace it with a new one
2.The oven lighting does not work	the bulb is loose or damaged	tighten up or replace the blown bulb (see Chapter *Cleaning and Maintenance)*
3.The appliance does not work	- no power	-check the fuse, replace if blown
4.Sensor fields do not respond when touched	- appliance is not turned on	- turn on the appliance
	- sensor field touched too briefly (less than one second)	- touch the sensor field longer
	- multiple sensors touched at the same time	- always touch only one sensor field (except when a cooking zone is switched off)
5.The appliance does not respond and emits and extended beep	- improper use (wrong sensor fields touched or sensors touched too briefly)	- reconnect the hob
	- sensor fields covered or dirty	- uncover or clean the sensor fields
6.The appliance switches itself off	- no sensor field is touched for 10 seconds of activating the appliance	- switch on the appliance and set heat setting without delay
	- sensor fields covered or dirty	- uncover or clean the sensor fields
7.A single cooking zone switches off and residual heat indicator „H” is shown.	- limited cook time	- switch on the cooking zone again
	- sensor fields covered or dirty	- uncover or clean the sensor fields
	- electronic components overheated	

OPERATION IN CASE OF EMERGENCY

PROBLEM	POSSIBLE CAUSE	REMEDY
8.Residual heat indicator extinguished even though the cooking zones are hot	- a power outage or the appliance has been disconnected	- residual heat indicator will be shown again the next time the appliance is turned on and off again
9.Hob cooking surface is cracked.	⚠ Danger! Immediately unplug the appliance or switch off the main circuit breaker. Refer the repair to the nearest service centre.	
10.When the problem is still not remedied.	Immediately unplug the appliance or switch off the main circuit breaker (fuse). Refer the repair to the nearest service centre. Important! You are responsible for operating the appliance correctly and maintaining its good condition. If you call service as a result of operating the appliance incorrectly you will be responsible for the costs incurred even under warranty. The manufacturer shall not be held liable for damage caused by failure to follow this manual.	
11.Induction hob makes buzzing sound.	This is normal. Cooling fan is operating to cool down internal electronics.	
12. Induction hob makes hissing and whistling sounds.	This is normal. When using several cooking zones at full power, the hob makes hissing and whistling sounds due to the frequencies used to power the coils.	
13. The hob does not work. The cooking zones will not operate.	- faulty electronics	- reset the appliance, unplug it for a few minutes (disconnect the fuse).

TECHNICAL DATA

Voltage rating	400V 3N~50Hz / 400V 2N~50Hz
Power rating	max. 11,0 kW
Cooker dimensions H/W/D	90 / 60 / 60,5 cm

Power consumption in standby mode [W]	0,8
Power consumption in off-mode [W]	-
Power consumption in networked standby mode [W]	-
Automatic standby/off time [min]	10

Basic Information:

The product meets the requirements of European standards EN 60335- 1; EN60335-2-6.

The data on the energy labels of electric ovens is given according to standard EN 60350-1 / IEC 60350-1. These values are defined with a standard workload a with the functions active: bottom and top heaters (conventional heating) and fan assisted heating (forced air heating), if these functions are available.

The energy efficiency class was assigned depending on the function available in the product in accordance with the priority below:

Forced air circulation ECO (ring heater + fan)	ECO
Forced air circulation ECO (bottom heater + top + roaster + fan)	ECO
Conventional mode ECO (bottom heater + top)	ECO

During energy consumption test, remove the telescopic runners (if the product is fitted with any).

NO:
Gram A/S
Tel.: 22 07 26 30
www.gram.no

SE:
Gram A/S
Tel.: 040 38 08 40
www.gram.se

FI:
Gram A/S
Tel.: 020 7756 350
www.gram.fi

Gram A/S
Helge Nielsens Allé 7B
DK-8723 Løsning
+45 73 20 10 00
www.gram.dk

IO-CFS-2084 / 9512458
(10.2026 V10)