GRAM

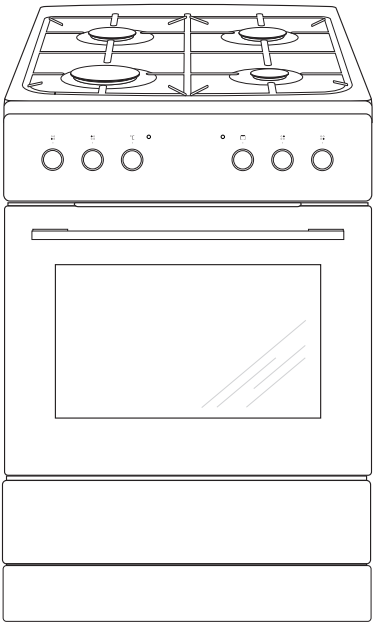

Type

GK 5610-90
GK 5610-90 X

EN INSTRUCTION MANUAL

DEAR CUSTOMER,

The cooker is exceptionally easy to use and extremely efficient. After reading the instruction manual, operating the cooker will be easy.

Before being packaged and leaving the manufacturer, the cooker was thoroughly checked with regard to safety and functionality.

Before using the appliance, please read the instruction manual carefully.
By following these instructions carefully you will be able to avoid any problems in using the appliance.

It is important to keep the instruction manual and store it in a safe place so that it can be consulted at any time.
It is necessary to follow the instructions in the manual carefully in order to avoid possible accidents.

Caution!
Do not use the cooker until you have read this instruction manual.
The cooker is intended for household use only.
The manufacturer reserves the right to introduce changes which do not affect the operation of the appliance.

TABLE OF CONTENTS

Safety instructions 4

Description of the appliance 11

Installation 13

Operation 18

Baking in the oven – practical hints 24

Cleaning and maintenance 29

Technical data 35

Warning: The appliance and its accessible parts become hot during use. Care should be taken to avoid touching heating elements. Children less than 8 years of age shall be kept away unless continuously supervised.

This appliance can be used by children aged from 8 years and above and persons with reduced physical, sensory or mental capabilities or lack of experience and knowledge if they have been given supervision or instruction concerning use of the appliance in a safe way and understand the hazards involved. Children shall not play with the appliance. Cleaning and user maintenance shall not be made by children without supervision.

Warning: Unattended cooking on a hob with fat or oil can be dangerous and may result in fire.

NEVER try to extinguish a fire with water, but switch off the appliance and then cover flame e.g. with a lid or a fire blanket.

Warning: Danger of fire: do not store items on the cooking surfaces.

During use the appliance becomes hot. Care should be taken to avoid touching heating elements inside the oven.

Accessible parts may become hot during use. Young children should be kept away.

Warning: Do not use harsh abrasive cleaners or sharp metal scrapers to clean the oven door glass since they can scratch the surface, which may result in shattering of the glass.

Warning: Ensure that the appliance is switched off before replacing the lamp to avoid the possibillity of electric shock.

Before opening the cover, cleaning it of any dirt is recommended. The cooker hob surface should be cooled down before closing the cover.

You should not use steam cleaning devices to clean the appliance.

CAUTION. The use of a gas cooking appliance results in the production of heat, moisture and products of combustion in the room in which it is installed. Ensure that the kitchen is well ventilated especially when the appliance is in use.

Prolonged intensive use of the appliance may require additional ventilation, for example the increasing of mechanical ventilation where present, additional ventilation to safely remove the products of combustion to outside (external) air whilst also providing room air changes with additional ventilation.

Consult a professional before installation of the additional ventilation.

CAUTION. This appliance is for cooking purposes only. It shall not be used for other purposes, for example room heating.

This appliance is for typical housekeeping functions (e.g. cooking) by non-expert users.

Examples of household environment are:

- house or apartments;
- shops, offices and other similar working environments;
- farm houses;
- hotels, motels, bed and breakfast and other residential type environments where appliances are used by non-expert users.

SAFETY INSTRUCTIONS

- The appliance becomes hot during operation. Take care not to touch the hot parts inside the oven.
- Please pay attention to children whilst the cooker is in operation, as children do not know the rules of cooker use. In particular, the hot surface burners, the oven chamber, hob grids, the door pane, and pans containing hot liquids standing on the hob may cause burns to children.
- Ensure that electrical connection leads of other home appliances (e.g. food mixer) do not touch the hot parts of the cooker.
- Do not place flammable material into the drawer whilst using the oven, as it may catch fire.
- Do not leave the cooker unattended when frying. Oils and fats may catch fire due to overheating.
- Avoid spilling boiling liquids on the burner.
- If the cooker is damaged, it should not be used again until the fault has been fixed by a specialist.
- Do not open the tap on the gas connection or cylinder valve before checking that all burner knobs are closed.
- Do not allow the burners to be soiled. If soiled, clean and dry burners immediately after they have cooled down.
- Do not put pans directly onto burners.
- Do not place pans with a weight greater than 10 kg onto the hob grid over one burner, or pans with a total weight of over 40 kg on the whole hob grid.
- Do not hit the knobs and burners.
- Do not put objects with a weight greater than 15 kg onto the open oven door.
- Alterations and repairs must not be carried out by an unqualified person.
- Only open the cooker knobs when you have a lighted match or a gas lighter in your hand.
- Do not extinguish the burner flame by blowing it out.
- Before opening the cover, it is recommended that you clean off any dirt. The cooker hob surface should be cool before closing the cover.
- If the cooker has a glass cover it may crack when heated. Switch off all the burners before lowering the cover.

- Do not make your own alterations to the cooker in order to adapt it to a different type of gas or move the cooker to another place or make changes to the power supply. These operations may only be carried out by an authorised electrician or fitter.
- Do not use harsh cleaning agents or sharp metal objects to clean the door as they can scratch the surface, which could then result in the glass cracking.
- Keep young children and people who do not know how to operate the appliance away from the cooker.
- IN THE CASE OF A SUSPECTED GAS LEAK YOU MUST NOT:
  light matches, smoke cigarettes, switch electrical receivers (door bell or light switch) on and off, or use other electric and mechanical devices that create electrical or percussive sparks. In the case of a suspected gas leak, immediately close the cylinder valve or tap cutting off gas supply, air the room, and then call a person authorised to undertake gas cooker repairs.
- In the event of any incident caused by a technical fault, disconnect the power (applying the above rule) and report the fault **to the service centre** to be repaired.
- Do not attach any antenna cords (e.g. radio) to the gas supply.
- In a case of gas escaping from leaky piping and catching fire, close gas supply immediately using the cutting-off valve.
- In a case of gas escaping from a leaky cylinder and catching fire: throw a wet blanket over the cylinder to cool it down and turn off the cylinder valve. After it has cooled down, take the cylinder out to an open space. Do not use the damaged cylinder.
- When the cooker is not to be used for several days, close the main valve on the gas piping; when using a gas cylinder, close it after each use.
- The cooker should not be cleaned using steam cleaning equipment.

HOW TO SAVE ENERGY

Using energy in a responsible way not only saves money but also helps the environment. So let us save energy! And this is how you can do it:

●**Use proper pans for cooking.**
A saucepan should never be smaller than a burner crown.
Always remember to cover the pans.

●**Ensure the burners, the grilling rack and the hob are clean.**
Dirt can affect the transfer of heat – and burnt-on spillages can often only be removed by products which cause damage to the environment.
In particular, ensure that the flame openings in the rings under caps, and openings of burner nozzles are clean.

●**Do not uncover the pan too often (a watched pot never boils!).**
Do not open the oven door unnecessarily often.

●**Only use the oven when cooking larger dishes.**
Meat of up to 1 kg can be prepared more economically in a pan on the cooker burner.

●**Make use of the residual heat from the oven.**
If the cooking time is greater than 40 minutes it is recommended that you to switch off the oven 10 minutes before the end of cooking time.

●**Make sure the oven door is properly closed.**
Heat can leak through spillages on the door seals. Clean up any spillages immediately.

●**Do not install the cooker in the direct vicinity of refrigerators/freezers.**
Otherwise energy consumption increases unnecessarily.

UNPACKING

During transportation, protective packaging was used to protect the appliance against any damage. After unpacking, please dispose of all elements of packaging in a way that will not cause damage to the environment.
All materials used for packaging the appliance are environmentally friendly; they are 100% recyclable and are marked with the appropriate symbol.

Caution! During unpacking, the packaging materials (polythene bags, polystyrene pieces, etc.) should be kept out of reach of children.

DISPOSAL OF THE APPLIANCE

Old appliances should not simply be disposed of with normal household waste, but should be delivered to a collection and recycling centre for electric and electronic equipment. A symbol shown on the product, the instruction manual or the packaging shows that it is suitable for recycling.

Materials used inside the appliance are recyclable and are labelled with information concerning this. By recycling materials or other parts from used devices you are making a significant contribution to the protection of our environment.

Information on appropriate disposal centres for used devices can be provided by your local authority.

DESCRIPTION OF THE APPLIANCE

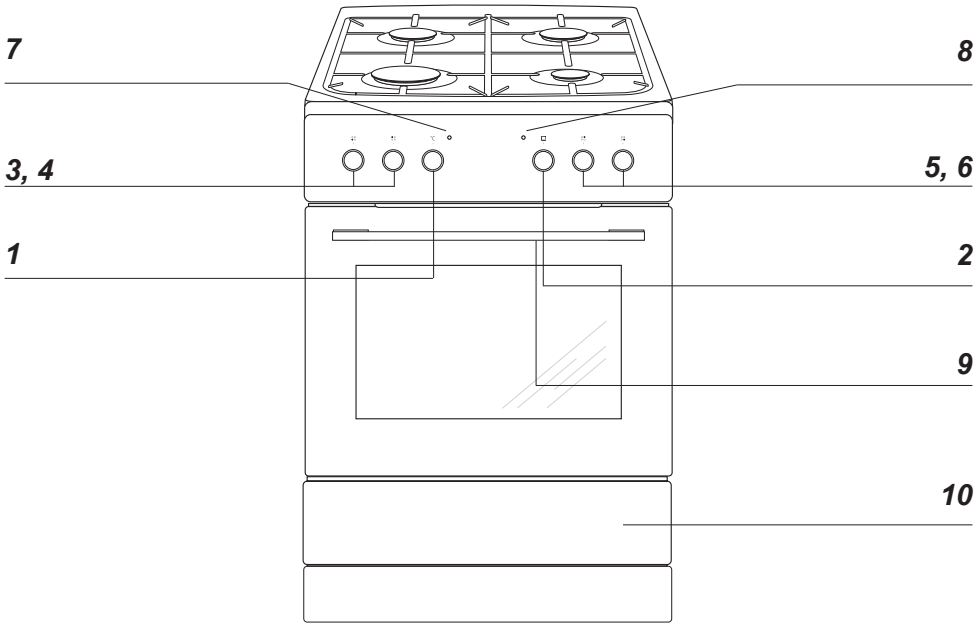

1 *Temperature control knob*
2 *Oven function selection knob*
3, 4, 5, 6 *Gas burner control knobs*
7 *Temperatureregulatorsignal light*
8 *Cooker operation signal light*
9 *Oven door* handle
10 *Drawer*

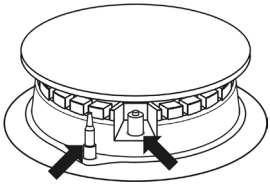

Burner safety valve *Spark ignitor*

SPECIFICATIONS OF THE APPLIANCE

Oven fittings:

Grill grate
(drying rack)

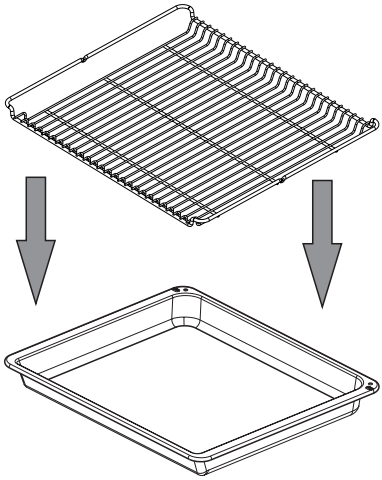

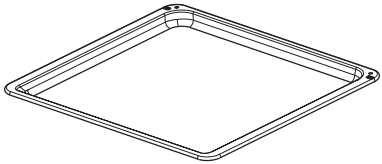

Baking tray

Roasting tray

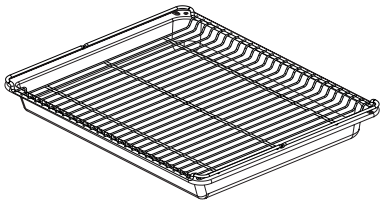

Sideracks

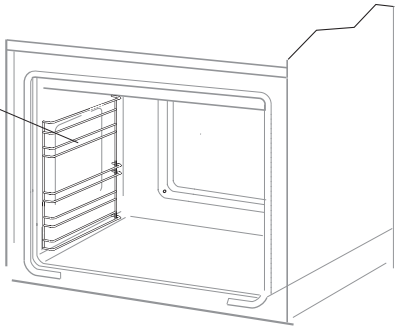

INSTALLATION

The following instructions are addressed to the qualified specialist installing the cooker. These instructions aim at ensuring that installation and maintenance activities are performed as professionally as possible.

Installing the cooker

- The kitchen should be dry and airy and have effective ventilation according to the existing technical provisions.
- The room should be equipped with a ventilation system that pipes away exhaust fumes created during combustion. This system should consist of a ventilation grid or hood. Hoods should be installed according to the manufacturer's instructions. The cooker should be placed so as to ensure free access to all control elements.
- The room should also enable the necessary air supply for proper gas combustion. Air supply should be not less than $2m^3/h$ per 1 kW of burner heat. The air can be delivered from outside by a duct with a section of at least $100cm^2$, or indirectly from adjoining rooms which are fitted with ventilation ducts leading outside.
- If the appliance is used intensively and for a long time, it may be necessary to open a window in order to improve ventilation.
- In terms of protection against the overheating of surrounding surfaces, the gas cooker is an X – class appliance and can be built into furniture only up to the level of the cooking hob, that is around 850 mm above the floor. Raising furniture construction over this level is inadvisable. Coating or veneer used on fitted furniture must be applied with a heat resistant adhesive (100°C). This prevents surface deformation or detachment of the coating. If you are unsure of your furniture's heat resistance, you should leave approximately 2 cm of free space around the cooker. The wall behind the cooker should be resistant to high temperatures. During operation, its back side can warm up to around 50°C above the ambient temperature.
- The cooker should stand on a hard, even floor (do not put it on a base).
- Before you start using the cooker it should be leveled, which is particularly important for fat distribution in a frying pan. To this purpose, adjustable feet are accessible after removal of the drawer. The adjustment range is +/- 5 mm.

Important!
Do not remove the edge guard from the appliance (do not appear in all furnace models).

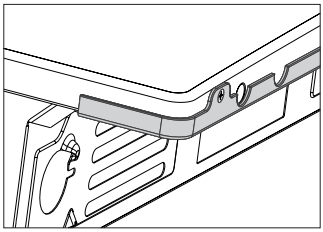

Important:
Whilst every care is taken to eliminate burrs and raw edges from this product, please take care when handling - we recommend the use of protective gloves during installation.

Mounting the overturning prevention bracket.

The bracket is mounted to prevent overturning of the cooker. When the overturning prevention bracket is installed, a child who climbs on the oven door will not overturn the appliance.

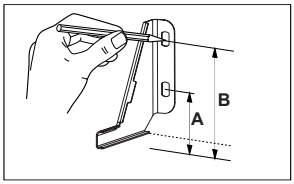

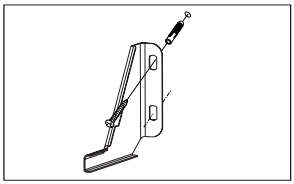

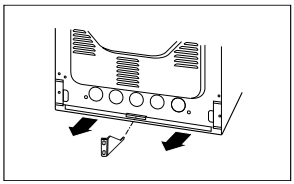

Cooker, height 850 mm
A=80 mm
B=123 mm

Cooker, height 900 mm
A=123 mm
B=166 mm

Gas connection

Caution!
The cooker should be connected to a gas supply of the particular type of gas that the appliance is manufactured to function with. Information about the type of gas that the cooker has been adapted to by the factory is shown on the data plate. The cooker should be connected exclusively by an appropriately authorised fitter and only he or she has the right to adapt the cooker to a different type of gas.

Fitting guidelines

A fitter should:

- have a gas fitter's authorisation,
- be acquainted with the information included on the data plate of the cooker about the type of gas to which the cooker is adapted; the information should be compared with gas supply conditions at the place of installation,
- check:
  - airing efficiency, that is efficiency of air exchange in the rooms,
  - tightness of gas fitting connections,
  - effectiveness of all functional elements of the cooker,
  - if the electricity supply is adapted to function with a safety ground lead (zero).
- provide the user with a connection certificate and give him or her instructions in cooker use.

Caution!
The cooker may only be connected to a liquid gas cylinder or the existing gas supply by an authorised fitter, observing all safety rules.

Connection with a flexible steel hose.
If the cooker is connected according to the class 2 specifications, sub-class I, only flexible metal hose can be used which meet the valid national regulations. Gas feeding connector must be G ½" threaded coupling.
Use only pipes and fittings that meet the requirements of the valid standards. Maximum admissible length of the flexible hose is 2000 mm.
Make sure the connection is not touching any mobile elements which could damage the hose.

Connection with a stable pipework.
The cooker comes with a G ½" threaded coupling.
The connection to gas supply must be done in a manner that excludes stresses in any point of the pipework or parts of the appliance.
Make sure you do not exceed the torque when making the connection (maximum torque is 20 Nm). Otherwise, the connection may be faulty or leaks may occur.

The gas hose should not touch metal elements of the cooker back shield.

Important!
Each time you replace a reducer carry out technical inspection of the cooker that covers gas valves and proper operation of the flame failure cut-off device.

Caution!
On completion of the cooker installation, the tightness of all connections should be checked, e.g. applying water with soap. Do not use fire to check tightness.

Caution!
Whilst every care is taken to eliminate burrs and raw edges from this product, please take care when handling - we recommend the use of protective gloves during installation.

Electrical connection

- The cooker is manufactured to work with a one-phase alternating current ((230V 1N~ + PE 50Hz) and is equipped with a 3 x 1,5 mm^2 connection lead of 1.5 mm length with a plug including a protection contact HO5 VV-F.
- A connection socket for electricity supply should be equipped with a protection pin and may not be located above the cooker. After the cooker is positioned, it is necessary to make the connection socket accessible to the user.
- Before connecting the cooker to the socket, check if:
  - the fuse and electricity supply are able to withstand the cooker load,
  - the electricity supply is equipped with an efficacious ground system which meets the requirements of current standards and provisions,
  - the plug is within easy reach.

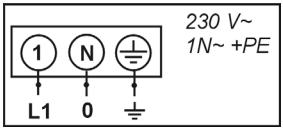

Adapting the cooker to another type of gas.

This operation may only be carried out by an appropriately authorised fitter.

If the gas the cooker is to be supplied is different from the gas provided for the cooker by the manufacturer, burner nozzles must be exchanged and the flame needs to be adjusted.

In order to adapt the cooker to burn a different type of gas, you should:

- exchange nozzles (see tables below),
- adjust the “economical” flame.

Warning:
The cookers provided by the manufacturer have burners which are factory-adapted to use the gas specified on their data plates.

Defendi burner (marked *DEFENDI* on the burner body)			**Gas type**		
			G20 2E 20 mbar	G30 3B/P 30mbar	G110 1a 8 mbar
Auxiliary	Nozzle diameter	mm	0,77	0,50	1,50
	Heat load	kW	1,00	1,00	1,00
	Gas consumption	g/h	-	73	-
Medium	Nozzle diameter	mm	0,97	0,65	1,85
	Heat load	kW	1,75	1,75	1,75
	Gas consumption	g/h	-	127	
Large	Nozzle diameter	mm	1,29	0,87	3,20
	Heat load	kW	3,00	3,00	3,00
	Gas consumption	g/h	-	218	-

Burner flame	**Re-arming from liquid gas to natural gas**	**Re-arming from natural gas to liquid gas**
Full	1. Exchange the burner nozzle for the appropriate type according to the nozzle table.	1. Exchange the burner nozzle for the appropriate type according to the nozzle table.
Economical	2. Unscrew the adjusting bolt slightly and adjust the flame size.	2. Screw in the adjusting bolt slightly and check the flame size.

In order to perform adjusting operations, take off the knobs. Adjusting elements of the oven burner are accessible after drawing out the oven chamber floor.

Surface burners supplied do not require adjustment of primary air. A correct flame has distinct internal cones of blue and green colour. A short, humming flame or long, yellow and smoking one, without clearly outlined cones, shows that there is poor quality of gas in the household piping or a damaged or soiled burner. In order to check the flame, heat a burner for around 10 minutes with a full flame, and next turn the valve knob to the economical flame position. The flame should not go out or jump onto the nozzles.

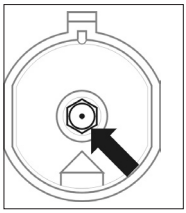

To exchange the burner nozzle – unscrew the nozzle with special socket spanner No 7 and replace with a new one according to a type of gas (see tables).

Caution!
Adapting the appliance to a different type of gas other than that indicated by the manufacturer of the cooker on the data plate, or purchasing a cooker for a different type of gas than supplied to the house, is exclusively the responsibility of the user and the fitter.

Gas supply to surface burners is opened and set by knobs, see figure below Knobs should be adjusted with the burner switched on and set to the economical flame position, using an adjustment screwdriver of the 2.5 mm size.

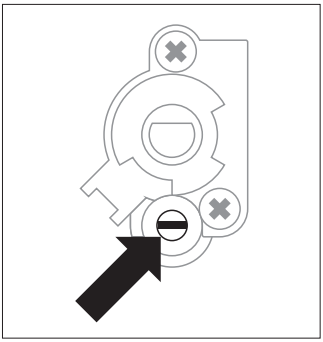

Adjustment *valve*

Caution!
After adjustment is completed, put on a label indicating the type of gas to which the cooker is now adapted.

Before first use

- remove packaging elements,
- gently remove the labels from the oven door, trying not to break the glue tape.
- empty the drawer, clean off factory protection from the oven chamber,
- take out and wash the oven fittings with warm water and a little washing-up liquid,
- switch on the ventilation in the room or open a window,
- heat the oven (to a temperature of 250°C, for approximately 30 min.), remove any stains and wash carefully.

- when handling the cooker, follow the safety instructions carefully.

Important!
The inside of the oven should only be washed with warm water and a small amount of washing–up liquid.

How to use surface burners

Choice of cookware

Make sure that the diameter of a pan base is always larger than the burner flame crown, and that the pan itself is covered. The recommended pan diameter is around 2.5 to 3 times larger than the burner diameter, that is, for:

- an auxiliary burner – a pan with a diameter of 90 to 150 mm,
- a medium burner – a pan with a diameter of 160 to 220 mm,
- a large burner – a pan with a diameter of 200 to 240 mm, and the pan height should not be greater than its diameter.

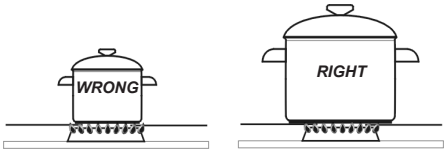

Gas burner control knobs

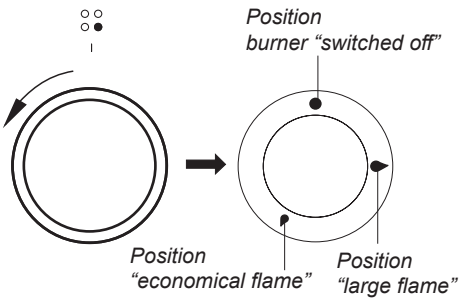

Ignition without an igniter

- light the match,
- press in the knob to the end and turn it left to the “large flame” position 🔥
- ignite gas with the match,
- set required flame size (e.g. “economical” 🔥),
- switch off the burner after finishing cooking, turning the knob right (to the off position●).

Knob ignition

- press in the knob to the end and turn it left to the “large flame” position 🔥 ,
- hold until the gas is lit,
- after the flame is lighted release the pressure on the knob and set a required flame size.

Caution!
In cooker models equipped with a surface burner safety valve, hold the knob pressed down to the end when igniting for 10 seconds at the “large flame” position to activate the safety device.

Selection of the appropriate flame

A correctly adjusted burner has a light blue flame with a clearly visible internal cone. Selection of flame size depends on the position of the burner knob which has been set:

- large flame
- small flame (“economical flame”)
- ● burner switched off (gas supply is cut off)

Depending on requirements, flame size can be set in a continuous manner.

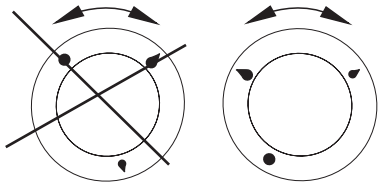

WRONG *RIGHT*

Caution!
Do not adjust the flame between the off position ● and the large flame position .

Operation of the burner protection valve

Some models are equipped with an automatic system that cuts off gas supply to a burner when the flame has disappeared.
This system protects the cooker against gas leakage when the flame on a burner goes out e.g. in case of spillage.
The user’s intervention is needed to re-ignite the burner.

Oven functions and operation.

Oven with automatic air circulation (including a fan and an ultra-fan heater)

The oven can be heated up using the bottom and top heaters, the grill or the ultra-fan heater. Operation of the oven is controlled by the oven function knob – to set a required function you should turn the knob to the selected position, and the temperature regulator knob – to set a required function you should turn the knob to the selected position.

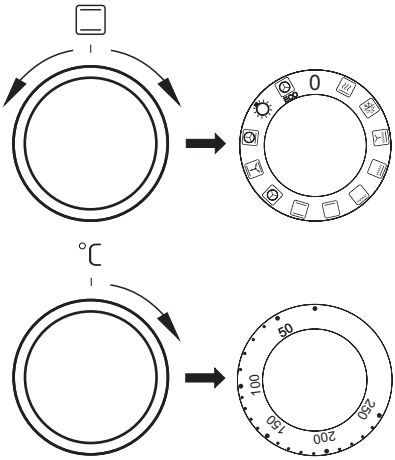

The oven can be switched off by setting both of these knobs to the position "●"/"**0**".

Caution!
When selecting any heating function (switching a heater on etc.) the oven will only be switched on after the temperature has ben set by the temperature regulator knob.

0 Oven is off

Rapid Preheating
Ring heater and roaster on. Use to preheat the oven.

Defrosting
Only fan is on and all heaters are off.

Fan and combined grill on
When the knob is turned to this position, the oven activates the combined grill and fan function. In practice, this function allows the grilling process to be speeded up and an improvement in the taste of the dish. You should only use the grill with the oven door shut.

Enhanced roaster (super roaster)
In this setting both roaster and top heater are on. This increases temperature in the top part of the oven's interior, which makes it suitable for browning and roasting of larger portions of food.

Roaster on.
Roasting is used for cooking of small portions of meat: steaks, schnitzel, fish, toasts, Frankfurter sausages, (thickness of roasted dish should not exceed 2-3 cm and should be turned over during roasting).

Bottom heater on
When the knob is set to this position the oven is heated using only the bottom heater. Baking of cakes from the bottom until done (moist cakes with fruit stuffing).

Top and bottom heaters on
Set the knob in this position for conventional baking. This setting is ideal for baking cakes, meat, fish, bread and pizza (it is necessary to preheat the oven and use a baking tray) on one oven level.

Convection with ring heating element
Setting the knob in this position allows the oven to be heated up by a heating element with air circulation forced by a rotating fan fitted in the central part of the back wall of the of and chamber. Lower baking temperatures than in the conventional oven can be used.
Heating the oven up in this manner ensures uniform heat circulation around the dish being cooked in the oven.

Top heater, bottom heater and fan are on.
This knob setting is most suitable for baking cakes. Convection baking (recommended for baking).
When the functions have been selected but the temperature knob is set to zero only the fan will be on. With this function you can cool the dish or the oven chamber.

Convection with ring heating element and bottom heater on
With this setting the convection fan and bottom heater are on, which increases the temperature at the bottom of the cooked dish. Intense heat from the bottom, moist cakes, pizza.

Independent oven lighting
Set the knob in this position to light up the oven interior.

ECO

Eco fan assisted heating
This is an optimised heating function designed to save energy when preparing food. At this knob position, the oven lighting is off.

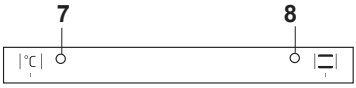

Switching on the oven is indicated by two signal lights, **7**, **8**, turning on. The **7** light turned on means the oven is working. If the **7** light goes out, it means the oven has reached the set temperature. If a recipe recommends placing dishes in a warmed-up oven, this should be not done before the **7** light goes out for the first time. When baking, the **7** light will temporarily come on and go out (to maintain the temperature inside the oven). The **8** signal light may also turn on at the knob position of “oven chamber lighting”.

Use of the grill

The grilling process operates through infrared rays emitted onto the dish by the incandescent grill heater.

In order to switch on the grill you need to:

- set the oven knob to the position marked with .
- heat the oven for approximately 5 minutes (with the oven door shut).
- insert a tray with a dish onto the appropriate cooking level, and if you are grilling on the grilling rack insert a tray for dripping on the level immediately below (under the rack).
- the oven door shut.

For grilling with the function grill and combined grill the temperature must be set to 250ºC, but for the function fan and grill it must be set to a maximum of 190ºC.

Caution!
The grill should be used with the oven door shut.

When the grill is in use, accessible parts can become hot.
It is recommended to keep children away from the oven.

BAKING IN THE OVEN – PRACTICAL HINTS

Baking

- we recommend using the baking trays which were provided with your cooker;
- it is also possible to bake in cake tins and trays bought elsewhere which should be put on the drying rack; for baking it is better to use black trays which conduct heat better and shorten the baking time;
- shapes and trays with bright or shiny surfaces are not recommended when using the conventional heating method (top and bottom heaters), use of such tins can result in undercooking the base of cakes;
- when using the ultra-fan function it is not necessary to initially heat up the oven chamber, for other types of heating you should warm up the oven chamber before the cake is inserted;
- before the cake is taken out of the oven, check if it is ready using a wooden stick (if the cake is ready the stick should come out dry and clean after being inserted into the cake);
- after switching off the oven it is advisable to leave the cake inside for about 5 min.;
- temperatures for baking with the ultra-fan function are usually around 20 – 30 degrees lower than in normal baking (using top and bottom heaters);
- the baking parameters given in Table are approximate and can be corrected based on your own experience and cooking preferences;
- if information given in recipe books is significantly different from the values included in this instruction manual, please apply the instructions from the manual.

Roasting meat

- cook meat weighing over 1 kg in the oven, but smaller pieces should be cooked on the gas burners.
- use heatproof ovenware for roasting, with handles that are also resistant to high temperatures;
- when roasting on the drying rack or the grate we recommend that you place a baking tray with a small amount of water on the lowest level of the oven;
- it is advisable to turn the meat over at least once during the roasting time and during roasting you should also baste the meat with its juices or with hot salty water – do not pour cold water over the meat.

BAKING IN THE OVEN – PRACTICAL HINTS

ECO Heating

- ECO Heating is an optimised heating function designed to save energy when preparing food.
- You cannot reduce the cooking time by setting a higher temperature; preheating the oven is not recommended.
- Do not change the temperature setting and do not open the oven door during cooking.

Recommended setting for ECO Heating

Type of dish	Type of heating	Temperature (°C)	Level	Time (min.)
Sponge cake	ECO	180 - 200	2 - 3	50 - 70
Sponge cake	ECO	180 - 200	2	50 - 70
Fish	ECO	190 - 210	2 - 3	45 - 60
Beef	ECO	200 - 220	2	90 - 120
Pork	ECO	200 - 220	2	90 - 160
Chicken	ECO	180 - 200	2	80 - 100

BAKING IN THE OVEN – PRACTICAL HINTS

Type of dish	Type of heating	Temperature (°C)	Level	Time (min.)
Sponge cake		160 - 200	2 - 3	30 - 50
Yeast cake/ Pound cake		160 - 170 [1]	3	25 - 40 [2]
Yeast cake/ Pound cake		155 - 170 [1]	3	25 - 40 [2]
Pizza		200 - 230 [1]	2 - 3	15 - 25
Fish		210 - 220	2	45 - 60
Fish		160 - 180	2 - 3	45 - 60
Fish		190	2 - 3	60 - 70
Sausages		230 - 250	4	14 - 18
Beef		225 - 250	2	120 - 150
Beef		160 - 180	2	120 - 160
Pork		160 - 230	2	90 - 120
Pork		160 - 190	2	90 - 120
Chicken		180 - 190	2	70 - 90
Chicken		160 - 180	2	45 - 60
Chicken		175 - 190	2	60 - 70
Vegetables		190 - 210	2	40 - 50
Vegetables		170 - 190	3	40 - 50

The times are apply to dish that is placed into a cold oven. For the preheated oven, the times should be reduced by about 5-10 minutes.

[1] Preheat

[2] Baking smaller items

Note: The figures given in Tables are approximate and can be adapted based on your own experience and cooking preferences.

TEST DISHES. According to standard EN 60350-1.

Baking

Type of dish	Accessory	Level	Type of heating	Temperature (°C)	Baking time [2] (min.)
Small cakes	Baking tray	3		160 - 170 [1]	25 - 40 [2]
	Baking tray	3		155 - 170 [1]	25 - 40 [2]
	Baking tray	3		155 - 170 [1]	25 - 40 [2]
	Baking tray Roasting tray	2 + 4 2 - baking tray or roasting tray 4 - baking tray		155 - 170 [1]	25 - 50 [2]
Shortbread	Baking tray	3		150 - 160 [1]	30 - 40 [2]
	Baking tray	3		150 - 170 [1]	25 - 35 [2]
	Baking tray	3		150 - 170 [1]	25 - 35 [2]
	Baking tray Roasting tray	2 + 4 2 - baking tray or roasting tray 4 - baking tray		160 - 175 [1]	25 - 35 [2]
Fatless sponge cake	Wire rack + black baking tin diameter 26cm	3		170 - 180 [1]	30 - 45 [2]
Apple pie	Wire rack + 2 black baking tins diameter 20cm	2 black baking tins placed after the dia-gonal, back right, front left		180 - 200 [1]	50 - 70 [2]

[1] Preheat, do not use Rapid preheat function.

[2] The times are apply to dish that is placed into a cold oven. For the preheated oven, the times should be reduced by about 5-10 minutes.

TEST DISHES. According to standard EN 60350-1.

Grilling

Type of dish	Accessory	Level	Type of heating	Temperature (°C)	Time (min.)
White bread toast	Wire rack	4		250 [1]	1,5 - 2,5
	Wire rack	4		250 [2]	2 - 3
Beef burgers	Wire rack + roasting tray (to gather drops)	4 - wire rack 3 - roasting tray		250 [1]	1st side 10 - 15 2nd side 8 - 13

[1] Preheat for 5 minutes, do not use Rapid preheat function.

[2] Preheat for 8 minutes, do not use Rapid preheat function.

Roasting

Type of dish	Accessory	Level	Type of heating	Temperature (°C)	Time (min.)
Whole chicken	Wire rack + roasting tray (to gather drops)	2 - wire rack 1 - roasting tray		180 - 190	70 - 90
	Wire rack + roasting tray (to gather drops)	2 - wire rack 1 - roasting tray		180 - 190	80 - 100

The times are apply to dish that is placed into a cold oven. For the preheated oven, the times should be reduced by about 5-10 minutes.

CLEANING AND MAINTENANCE

By ensuring proper cleaning and maintenance of your cooker you can have a significant influence on the continuing fault-free operation of your appliance.

Before you start cleaning, the cooker must be switched off and you should ensure that all knobs are set to the "●"/"0" position. Do not start cleaning until the cooker has completely cooled.

Burners, the burner hob grilling rack, the cooker housing

- In the case of soiled burners and grilling rack, these elements must be removed from the cooker and washed with warm water and washing – up products intended for fats. Next, wipe them dry. After the grilling rack has been removed, wash the burner hob carefully and wipe with a dry and soft cloth. In particular, ensure flame openings in rings under caps are clean, see the figure below. Do not use steel wire or drill holes.

Caution!
Burner elements must always be clean. Water particles may hamper gas flow and produce an incorrect burner flame.

Important:
The burner caps and leads must be repositioned correctly so that they sit squarely onto the hob as shown.

correct

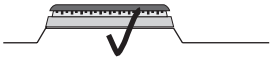

incorrect

incorrect

- Wash enamel elements of the cooker with light washing products. When cleaning do not use cleaning agents with a strong abrasive effect, such as scouring powders containing an abrasive, abrasive compounds, abrasive stones, pumice stones, wire brushes and so on.
- Before you start using the cooker with stainless steel hob, its cooking zone first needs to be carefully washed. It is important to remove glue residues from the foils taken off trays during installation, as well as adhesive tape applied during packaging. The hob should be cleaned regularly after each use. Do not allow the hob to get heavily stained, particularly from burnt-on spillages from boiled over liquids.

Oven

- The oven should be cleaned after every use. When cleaning the oven the lighting should be switched on to enable you to see the surfaces better.
- The oven chamber should only be washed with warm water and a small amount of washing-up liquid.
- **Steam Clean function**
  - Pour approximately 0.25 ml (1 glass) of water onto the tray inserted on level one in the oven.
  -Close the oven door,
  -set the temperature adjustment knob to 50°C, and the function selector knob to bottom heater position
  -heat the oven chamber for about 30 minutes,
  -When the steam cleaning process is completed, wipe out the chamber with a damp cloth or a sponge soaked in a mild solution of washing-up liquid.
- After cleaning the oven chamber wipe it dry.
- Use a soft, moisture absorbing cloth to clean surfaces

Caution!
Do not use cleaning products containing abrasive materials for the cleaning and maintenance of the glass front panel.

Important!
Do not use any abrasive agents, harsh detergents or abrasive objects for cleaning.
Only use warm water with a small addition of dishwashing liquid to clean the front of the appliance. Do not use washing powders or creams.

Wire shelf supports
(Telescopic guides do not appear in all furnace models)
Wire shelf supports are esay to remove for wasking. Pull the front catch, then tilt the support and remove from the rear catch.

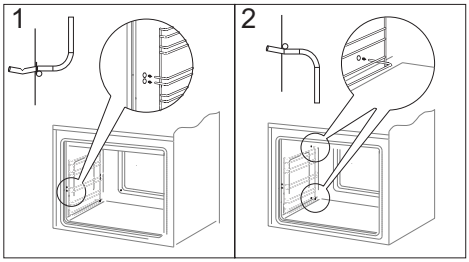

Removing wire shelf supports

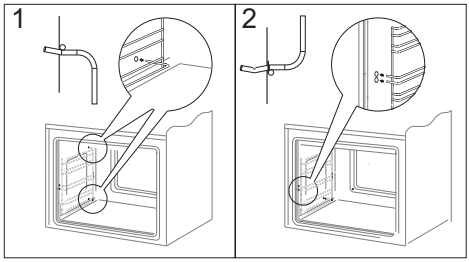

Installing wire shelf supports

Replacing the halogen bulb in the oven

Before replacing the halogen bulb, make sure the appliance is disconnected from the electric mains to avoid a possible electric shock.

1. Unplug the appliance
2. Remove shelves and trays from the oven.
3. Unscrew and wash the lamp cover and then wipe it dry.
4. Pull the halogen bulb out using a cloth or paper. If necessary, replace the halogen bulb with a new one.
- voltage 230V
- power 25W
5. Replace the halogen bulb in its socket.
6. Screw in the lamp cover.

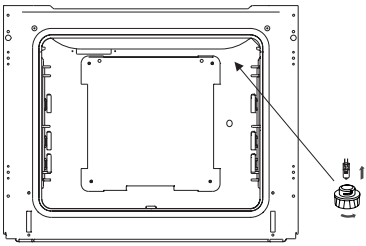

Oven lighting

Note: Make sure not to touch the halogen directly with your fingers!

Door removal

In order to obtain easier access to the oven chamber for cleaning, it is possible to remove the door. To do this, tilt the safety catch part of the hinge upwards (fig. A). Close the door lightly, lift and pull it out towards you. In order to fit the door back on to the cooker, do the inverse. When fitting, ensure that the notch of the hinge is correctly placed on the protrusion of the hinge holder. After the door is fitted to the oven, the safety catch should be carefully lowered down again. If the safety catch is not set it may cause damage to the hinge when closing the door.

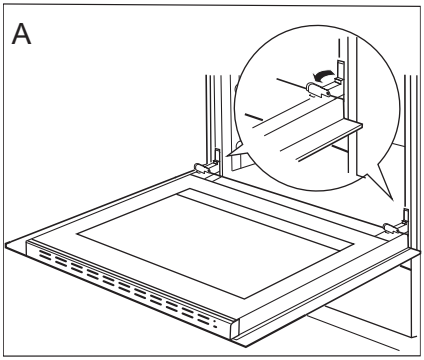

Tilting the hinge safety catches

Removing the inner panel

1. Using a flat screwdriver unhook the upper door slat, prying it gently on the sides (fig. B).
2. Pull the upper door slat loose. (fig. B, C)

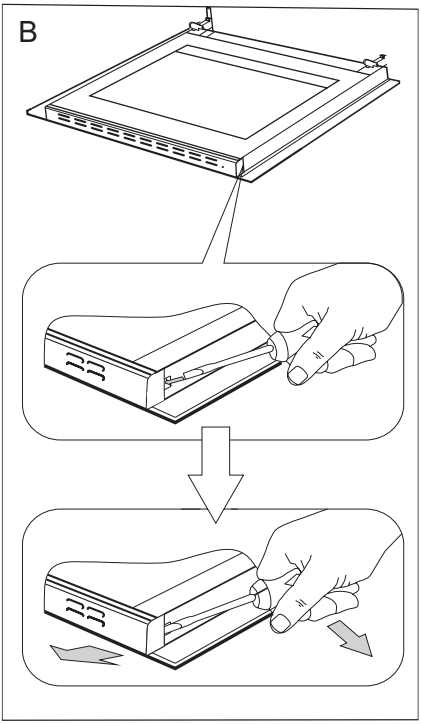

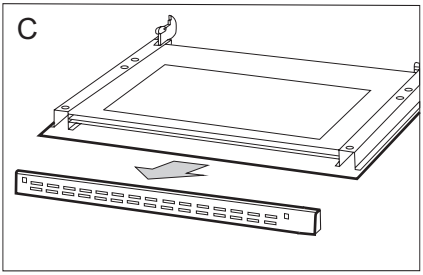

3. Pull the inner glass panel from its seat (in the lower section of the door). Remove the inner panel (fig. D).
4. Clean the panel with warm water with some cleaning agent added.
   Carry out the same in reverse order to reassemble the inner glass panel. Its smooth surface shall be pointed upwards.
   Important! Do not force the upper strip in on both sides of the door at the same time. In order to correctly fit the top door strip, first put the left end of the strip on the door and then press the right end in until you hear a “click”. Then press the left end in until you hear a “click”.

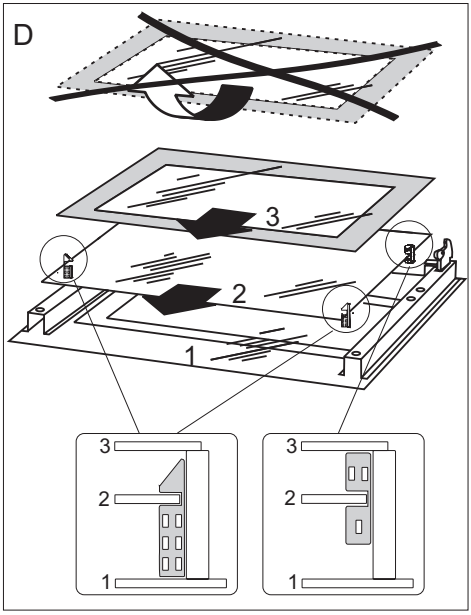

Removal of the internal glass panel

OPERATION IN CASE OF EMERGENCY

In the event of an emergency, you should:

- switch off all working units of the cooker
- disconnect the mains plug
- call the service centre
- some minor faults can be fixed by referring to the instructions given in the table below.

Before calling the customer support centre or the GRAM service centre check the following points that are presented in the table.

PROBLEM	REASON	ACTION
1. A burner does not light	flame openings soiled	close the gas by cutting off valve, close burner knobs, air the room, take out and clean the burner, blow on flame openings
2. A gas igniter does not light	break in power supply	check the household fuse box; if there is a blown fuse, replace it with a new one
	break in gas supply	open the gas supply valve
	soiled (greasy) gas ignitor	clean the gas igniter
	igniter knob not pressed in long	hold the knob pressed in until a full flame appears around the burner crown
3. The flame goes out when lighting a burner	knob released too quickly	hold the knob down longer at the “large flame” position
4. electrical fittings do not work	break in power supply	check the household fuse box, if there is a blown fuse replace it with a new one
5. the oven lighting does not work	the bulb is loose or dama-ged	tighten up or replace the blown bulb (see Chapter *Cleaning and Maintenance)*

Warning:
All repairs and regulatory activities should be carried out by the appropriate service centre or by an appropriately authorised fitter.

TECHNICAL DATA

Voltage rating	230V~50 Hz
Power rating	max. 3,6 kW
Burner	
Auxiliary	1000 W
Medium	1750 W
Large	3000 W
Cooker dimensions H/W/D	90 / 60 / 60 cm

Power consumption in standby mode [W]	-
Power consumption in off-mode [W]	0,0
Power consumption in networked standby mode [W]	-
Automatic standby/off time [min]	-

The product meets the requirements of European standards EN 60335- 1; EN60335-2-6, EN 30-1-1.

The data on the energy labels of electric ovens is given according to standard EN 60350-1 / IEC 60350-1. These values are defined with a standard workload a with the functions active: bottom and top heaters (conventional heating) and fan assisted heating (forced air heating), if these functions are available.

The energy efficiency class was assigned depending on the function available in the product in accordance with the priority below:

Forced air circulation ECO (ring heater + fan)	ECO
Forced air circulation ECO (bottom heater + top + roaster + fan)	ECO
Conventional mode ECO (bottom heater + top)	ECO

During energy consumption test, remove the telescopic runners (if the product is fitted with any).

NO:
Gram A/S
Tel.: 22 07 26 30
www.gram.no

SE:
Gram A/S
Tel.: 040 38 08 40
www.gram.se

FI:
Gram A/S
Tel.: 020 7756 350
www.gram.fi

Gram A/S
Helge Nielsens Allé 7B
DK-8723 Løsning
+45 73 20 10 00
www.gram.dk

IO-CFS-2342 / 9515139
(10.2026 v3)