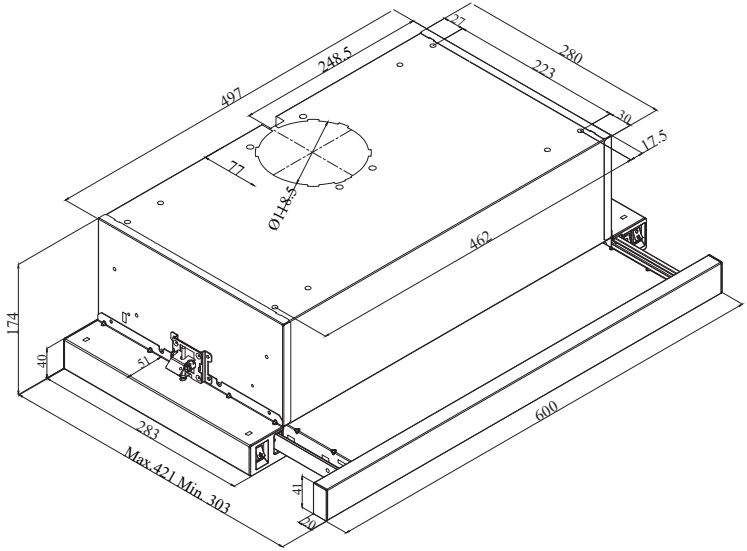
497
248.5
27
280
223
30
17.5
77
Ø148.5
462
174
40
57
283
Max.421 Min.303
600
41
20

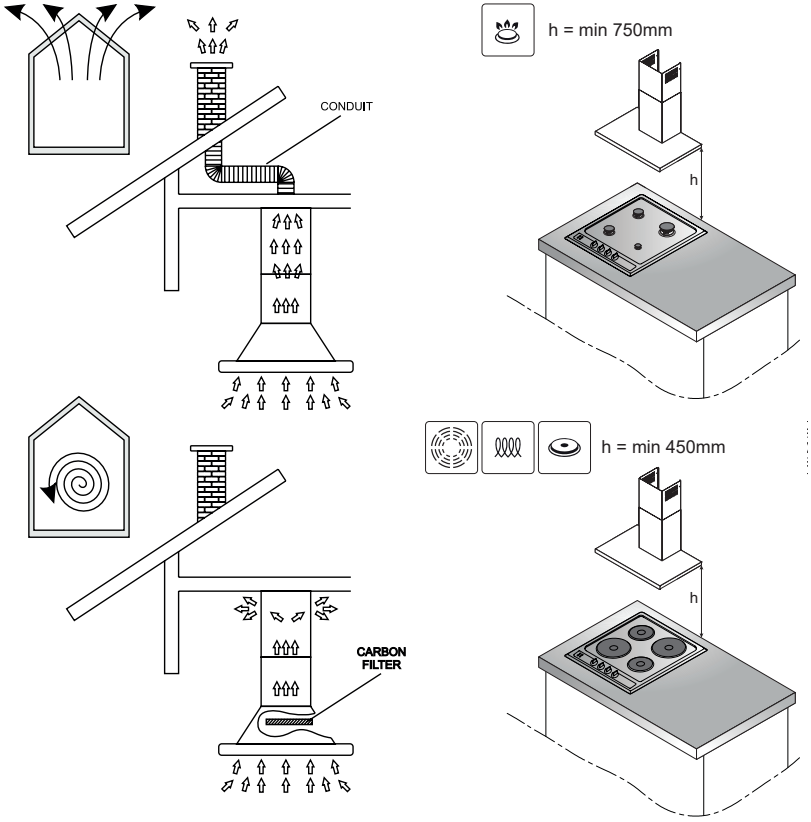
CONDUIT
h = min 750mm
h
h = min 450mm
h
CARBON
FILTER