GRAM

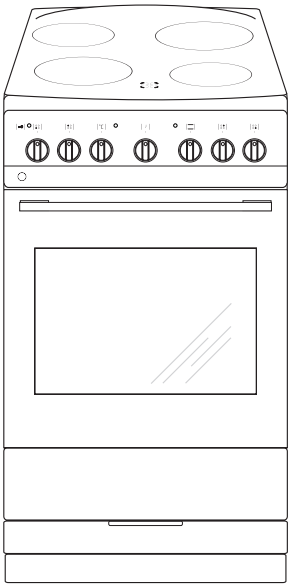

Type

EKT 3500-90

(EN) INSTRUCTION MANUAL

DEAR CUSTOMER,

The cooker is exceptionally easy to use and extremely efficient. After reading the instruction manual, operating the cooker will be easy.

Before being packaged and leaving the manufacturer, the cooker was thoroughly checked with regard to safety and functionality.

Before using the appliance, please read the instruction manual carefully.
By following these instructions carefully you will be able to avoid any problems in using the appliance.

It is important to keep the instruction manual and store it in a safe place so that it can be consulted at any time.
It is necessary to follow the instructions in the manual carefully in order to avoid possible accidents.

Caution!
Do not use the cooker until you have read this instruction manual.

The cooker is intended for household use only.

The manufacturer reserves the right to introduce changes which do not affect the operation of the appliance.

TABLE OF CONTENTS

Safety instructions 4
Description of the appliance 9
Installation 11
Operation 13
Baking in the oven – practical hints 18
Test dishes 21
Cleaning and maintenance 23
Technical data 29

Warning: The appliance and its accessible parts become hot during use. Care should be taken to avoid touching heating elements. Children less than 8 years of age shall be kept away unless continuously supervised.

This appliance can be used by children aged from 8 years and above and persons with reduced physical, sensory or mental capabilities or lack of experience and knowledge if they have been given supervision or instruction concerning use of the appliance in a safe way and understand the hazards involved. Children shall not play with the appliance. Cleaning and user maintenance shall not be made by children without supervision.

Warning: Unattended cooking on a hob with fat or oil can be dangerous and may result in fire.

NEVER try to extinguish a fire with water, but switch off the appliance and then cover flame e.g. with a lid or a fire blanket.

Warning: Danger of fire: do not store items on the cooking surfaces.

Warning: If the surface is cracked, switch off the appliance to avoid the possibillity of electric shock.

During use the appliance becomes hot. Care should be taken to avoid touching heating elements inside the oven.

Accessible parts may become hot during use. Young children should be kept away.

Warning: Do not use harsh abrasive cleaners or sharp metal scrapers to clean the oven door glass since they can scratch the surface, which may result in shattering of the glass.

Warning: Ensure that the appliance is switched off before replacing the lamp to avoid the possibillity of electric shock.

You should not use steam cleaning devices to clean the appliance.

Danger of burns! Hot steam may escape when you open the oven door. Be careful when you open the oven door during or after cooking. Do NOT lean over the door when you open it. Please note that depending on the temperature the steam can be invisible.

Caution: The cooking process has to be supervised. A short term cooking process has to be supervised continuously.

Warning: Use only hob guards designed by manufacturer of the cooking appliance or indicated by the manufacturer of the appliance in the instructions for use as suitable or hob guards incorporated in the appliance. The use of inappropriate guards can cause accidents.

SAFETY INSTRUCTIONS

- Always keep children away from the cooker.
  While in operation direct contact with the cooker may cause burns!
- Ensure that small items of household equipment, including connection leads, do not touch the hot oven or the hob as the insulation material of this equipment is usually not resistant to high temperatures.
- Do not leave the cooker unattended when frying. Oils and fats may catch fire due to overheating or boiling over.
- Do not allow the hob to get soiled and prevent liquids from boiling over onto the surface of the hob. This refers in particular to sugar which can react with the ceramic hob and cause irreversible damage. Any spillages should be cleaned up as they happen.
- Do not place pans with a wet bottom on the warmed up heating zones as this can cause irreversible changes to the hob (irremovable stains).
- Use pans that are specified by the manufacturer as designed for use with a ceramic hob.
- If any defects, deep scratches, cracks or chips appear on the ceramic hob, stop using the cooker immediately and contact the service centre.
- Do not switch on the hob until a pan has been placed on it.
- Do not use pans with sharp edges that may cause damage to the ceramic hob.
- Do not look directly at the halogen heating zones (not covered by a pan) when they are warming up.
- Do not put pans weighing over 15 kg on the opened door of the oven and pans over 25 kg on the hob.
- Do not use harsh cleaning agents or sharp metal objects to clean the door as they can scratch the surface, which could then result in the glass cracking.
- Do not use the cooker in the event of a technical fault. Any faults must be fixed by an appropriately qualified and authorised person.
- In the event of any incident caused by a technical fault, disconnect the power and report the fault to the service centre to be repaired.
- The rules and provisions contained in this instruction manual should be strictly observed. Do not allow anybody who is not familiar with the contents of this instruction manual to operate the cooker.
- The appliance has been designed only for cooking. Any other use (for example for heating) does not comply with its operating profile and may cause danger.

HOW TO SAVE ENERGY

Using energy in a responsible way not only saves money but also helps the environment. So let's save energy! And this is how you can do it:

- **Use proper pans for cooking.**

Pans with thick, flat bases can save up to 1/3 on electric energy. Remember to cover pans if possible otherwise you will use four times as much energy!

- **Match the size of the saucepan to the surface of the heating zone.**

A saucepan should never be smaller than a heating zone.

- **Ensure heating zones and pan bases are clean.**

Soils can prevent heat transfer – and repeatedly burnt–on spillages can often only be removed by products which cause damage to the environment.

- **Do not uncover the pan too often (a watched pot never boils!).**

Do not open the oven door unnecessarily often.

Switch off the oven in good time and make use of residual heat.

For long cooking times, switch off heating zones 5 to 10 minutes before finishing cooking. This saves up to 20% on energy.

Only use the oven when cooking larger dishes.

Meat of up to 1 kg can be prepared more economically in a pan on the cooker hob.

- **Make use of residual heat from the oven.**

If the cooking time is greater than 40 minutes switch off the oven 10 minutes before the end time.

Important! When using the timer, set appropriately shorter cooking times according to the dish being prepared.

- **Only grill with the ultrafan after closing the oven door.**
- **Make sure the oven door is properly closed.**

Heat can leak through spillages on the door seals. Clean up any spillages immediately.

- **Do not install the cooker in the direct vicinity of refrigerators/freezers.**

Otherwise energy consumption increases unnecessarily.

UNPACKING

During transportation, protective packaging was used to protect the appliance against any damage. After unpacking, please dispose of all elements of packaging in a way that will not cause damage to the environment.
All materials used for packaging the appliance are environmentally friendly; they are 100% recyclable and are marked with the appropriate symbol.

Caution! During unpacking, the packaging materials (polythene bags, polystyrene pieces, etc.) should be kept out of reach of children.

DISPOSAL OF THE APPLIANCE

Old appliances should not simply be disposed of with normal household waste, but should be delivered to a collection and recycling centre for electric and electronic equipment. A symbol shown on the product, the instruction manual or the packaging shows that it is suitable for recycling.

Materials used inside the appliance are recyclable and are labelled with information concerning this. By recycling materials or other parts from used devices you are making a significant contribution to the protection of our environment.

Information on appropriate disposal centres for used devices can be provided by your local authority.

DESCRIPTION OF THE APPLIANCE

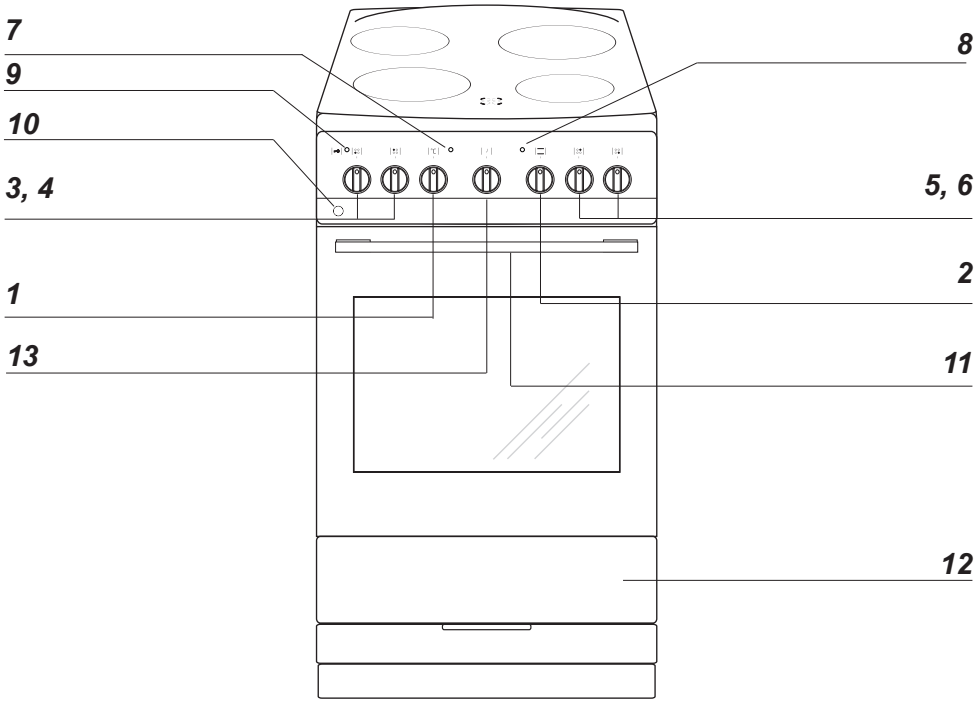

1 *Temperature control knob*
2 *Oven function selection knob*
3, 4, 5, 6 *Heating zone control knobs*
7 *Temperatureregulatorsignal light* **L**
8 *Cooker operation signal light* **R**
9 *Child lock indicator* **B**
10 *Child lock button*
11 *Oven door handle*
12 *Drawer*
13 *Mechanical timer*

SPECIFICATIONS OF THE APPLIANCE

Cooker fittings:

Grill grate
(drying rack)

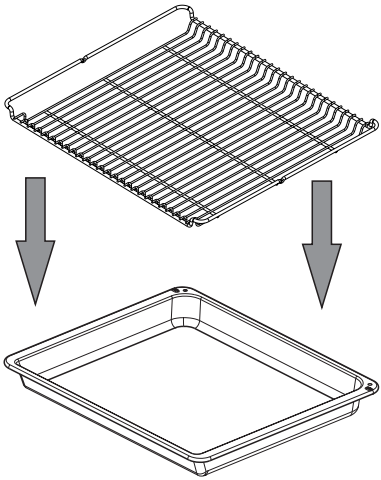

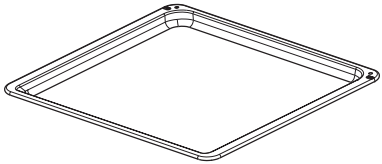

Baking tray

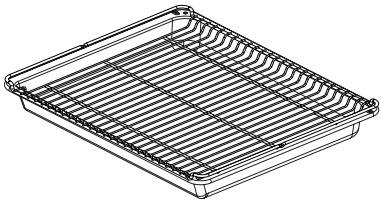

Roasting tray

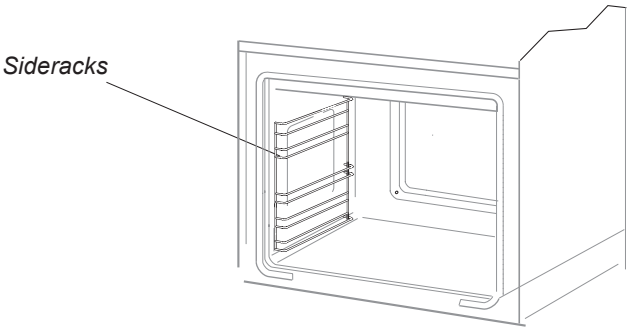

Installing the cooker

- The kitchen should be dry and airy and have effective ventilation according to the existing technical provisions.

- The room should be equipped with a ventilation system that pipes away exhaust fumes created during combustion. This system should consist of a ventilation grid or hood. Hoods should be installed according to the manufacturer's instructions. The cooker should be placed so as to ensure free access to all control elements.
- Coating or veneer used on fitted furniture must be applied with a heat resistant adhesive (100°C). This prevents surface deformation or detachment of the coating. If you are unsure of your furniture's heat resistance, you should leave approximately 2 cm of free space around the cooker. The wall behind the cooker should be resistant to high temperatures. During operation, its back side can warm up to around 50°C above the ambient temperature.

- The cooker should stand on a hard, even floor (do not put it on a base).

- Before you start using the cooker it should be leveled, which is particularly important for fat distribution in a frying pan. To this purpose, adjustable feet are accessible after removal of the drawer. The adjustment range is +/- 5 mm.

Mounting the overturning prevention bracket.

The bracket is mounted to prevent overturning of the cooker. When the overturning prevention bracket is installed, a child who climbs on the oven door will not overturn the appliance.

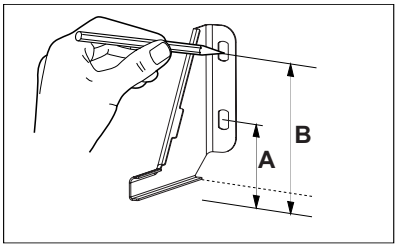

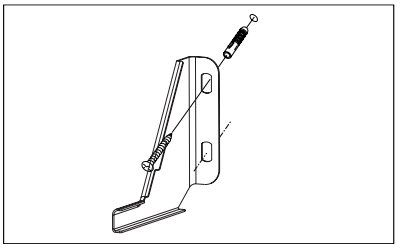

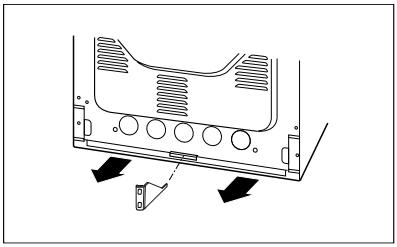

Cooker, height 900 mm
A=123 mm
B=166 mm

INSTALLATION

Connecting the cooker to the mains

- Installation must only be carried out by an authorised electrician. This will ensure that the applicable regulations in the “Heavy Current Regulation” are complied with.
- The installation must comply with any special requirements issued by the local electricity supply company.
- The cooker must be connected to a separate power supply circuit.
- The connection must only be established in accordance with the circuit diagrams which can be found on the cover to the screw terminals on the rear plate.
  NB: This product uses 16A.
- When connecting or replacing the power cable, at least one HO5 VVF-5G2.5 conduit or equivalent must be used.
- *NB:* To ensure compliance with the applicable safety requirements, a switch must be fitted which isolates all terminals and has a contact distance of at least 3 mm. (Can be a master switch).

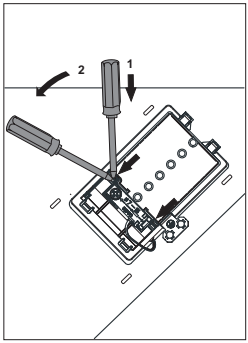

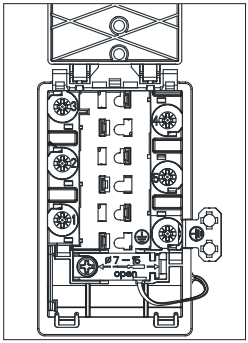

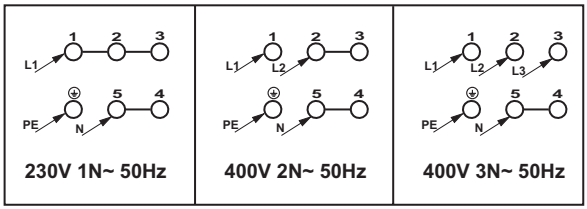

Before first use

- Remove packaging, empty the drawer, clean the interior of the oven and the hob.
- Take out and wash the oven fittings with warm water and a little washing–up liquid.
- Switch on the ventillation in the room or open a window.
- Heat the oven (to a temperature of 250°C, for approx. 30 min.), remove any stains and wash carefully; the heating zones of the hob should be heated for around 4 min. without a pan.

Important!
To clean the oven, only use a cloth well rang out with warm water to which a little washing-up liquid has been added.

Child lock function

When delivered, the appliance child lock function is factory activated, i.e. you will not be able to use the oven or the hob.

Note. When child lock function is activated, the indicator lights up red and when it is deactivated, the indicator is off.

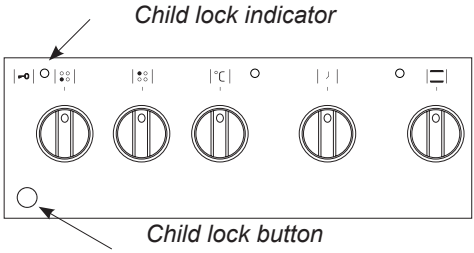

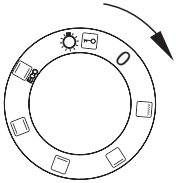

To deactivate the child lock, turn the oven function knob to the (key) pictogram and press and hold the child lock button for 5 seconds. The child lock indicator goes off. Now you can use the appliance.

To use the hob, deactivate the child lock and set the timer to a position other than 0. To activate the child lock, turn the oven function knob to the (key) pictogram and press and hold the child lock button for 5 seconds.

Note. When you disconnect the power, the child lock function activates again

Mechanical timer

Use the timer to set the hob heating duration. The timer can be the set from 0 to 120 minutes. When the set duration has elapsed, you will hear beeping and cooking zones will be turned off.

To set heating duration - turn the knob clockwise and set the desired time.

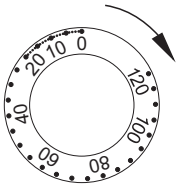

When the knob is set to “0”, the cooking zone cannot be used.

Note. First turn timer knob by approx. 90° and set the desired duration from 0 to 10 minutes.

OPERATION

Controlling the heating zones of the ceramic hob.

Choice of cookware

Choose a pan with a diameter that is at least as large as the heating zone. For roasting tins there is a special widened heating zone of 140x250. **Do not use pans with a concave or convex base**. Always remember to put a proper cover on the pan. We recommend the use of pans with thick, even bases.
If the heating zones and pans are soiled it is impossible to make full use of the heat.

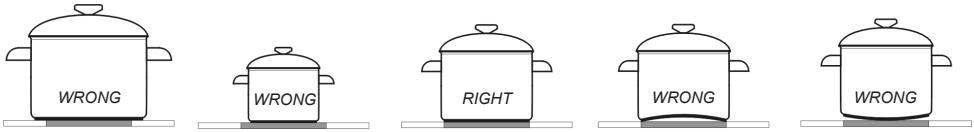

Heat level selection

The heating zones have different levels of heat output. The heating zones can be adjusted by turning the knob clockwise or anticlockwise. Symbols printed around the knob indicate available oven functions. The *R* indicator light indicates that a cooking zone is on.

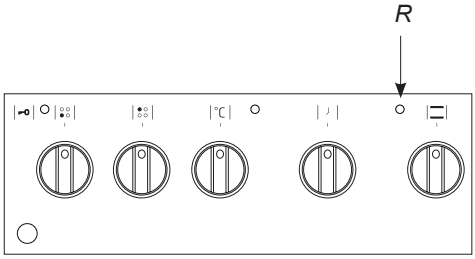

Examples of knob settings

0	Switch off
●	MIN. Warming up
1	Stewing vegetables, slow cooking
●	Cooking soups, larger dishes
2	Slow frying
●	Grilling meat, fish
3	MAX. Fast heating up, fast cooking, frying

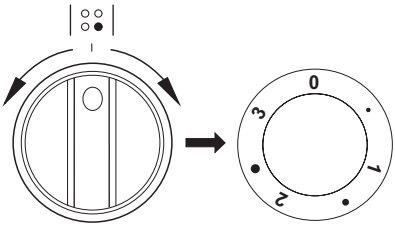

Zone heating indicator

If the temperature of a heating zone exceeds 50°C this is signalled by an indicator which lights up for that zone.
When the heating indicator lights up it warns the person using the cooker against touching a hot heating zone.
For about 5 to 10 minutes after a heating zone is switched off it will still have residual heat that can be used, for example to warm up or keep dishes warm without switching on another heating zone.

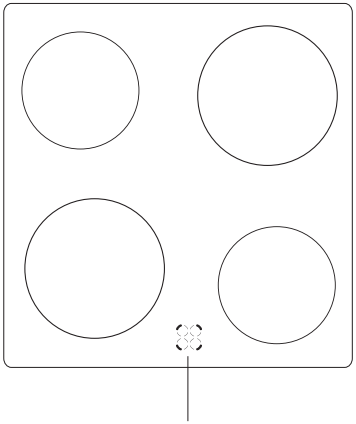

Zone heating indicator

Oven functions and operation

Oven with conventional heating (including top + bottom heaters)

The oven can be warmed up using the bottom and top heaters, as well as the grill. Operation of the oven is controlled by the oven function knob – to set a required function you should turn the knob to the selected position,

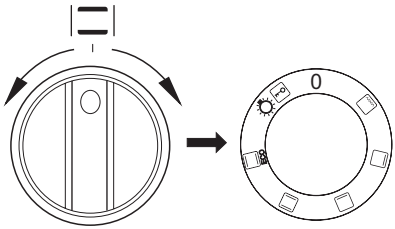

as well as the temperature regulator knob – to set a required function you should turn the knob to the selected position.

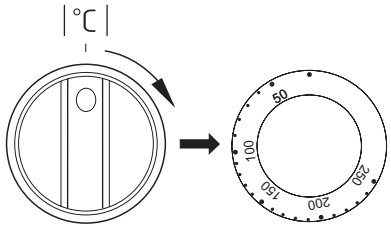

The oven can be switched off by setting both of these knobs to the position "●"/"**0**".

Possible settings of the oven function knob

0 Oven is off

Grill heater on
Setting the knob to this position allows dishes to be grilled on the grate.

Top heater on
Setting the knob to this postion allows the oven to be heated only with the top heater switched on, e.g. use for final baking from above.

Bottom heater on
When the knob is set to this position the oven is heated using only the bottom heater. Use for e.g. final baking from the bottom.

Bottom and top heaters on
Setting the knob to this position allows the oven to be heated conventionally.

ECO

ECO Heating
This is an optimised heating function designed to save energy when preparing food.

Separate oven lighting
By setting the knob to this position the lighting inside the oven is switched on, e.g. use when washing the oven chamber.

Child Lock
Turn the oven function knob to the key pictogram and press and hold the child lock button for 5 seconds to activate / deactivate the child lock.

Indicator lights

When the oven is on the oven cavity lighting is on and the *L* indicator light comes on. When the oven cavity reaches the set temperature, the *L* light is off. Some recipes recommend putting dishes in the pre-heated oven. Wait until the *L* indicator light is off for the first time before placing the dish in the oven. When baking the *L* light will turn on and off periodically (the set temperature inside the oven is maintained).

The *R* indicator light indicates that the hob cooking zone is on.

The *B* indicator light indicates that the child lock function is active.

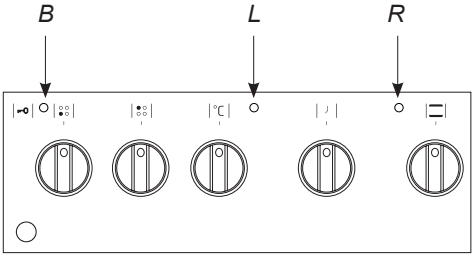

Use of the grill

The grilling process operates through infrared rays emitted onto the dish by the incandescent grill heater.

In order to switch on the grill you need to:

- Set the oven knob to the position marked grill,
- Heat the oven for approx. 5 minutes (with the oven door shut).
- Insert a tray with a dish onto the appropriate cooking level; and if you are grilling on the grate insert a tray for dripping on the level immediately below (under the grate).
- Close the oven door.

For grilling with the function grill and combined grill the temperature must be set to 210ºC, but for the function fan and grill it must be set to a maximum of 190ºC.

Warning!
When using function grill it is recommended that the oven door is closed.
When the grill is in use accessible parts can become hot.
It is best to keep children away from the oven.

BAKING IN THE OVEN – PRACTICAL HINTS

Baking

- we recommend using the baking trays which were provided with your cooker;
- it is also possible to bake in cake tins and trays bought elsewhere which should be put on the drying rack; for baking it is better to use black trays which conduct heat better and shorten the baking time;
- shapes and trays with bright or shiny surfaces are not recommended when using the conventional heating method (top and bottom heaters), use of such tins can result in undercooking the base of cakes;
- before the cake is taken out of the oven, check if it is ready using a wooden stick (if the cake is ready the stick should come out dry and clean after being inserted into the cake);
- after switching off the oven it is advisable to leave the cake inside for about 5 min.;
- the baking parameters given in Table are approximate and can be corrected based on your own experience and cooking preferences;
- if information given in recipe books is significantly different from the values included in this instruction manual, please apply the instructions from the manual.

Roasting meat

- cook meat weighing over 1 kg in the oven, but smaller pieces should be cooked on the cooker hob;
- use heatproof ovenware for roasting, with handles that are also resistant to high temperatures;
- when roasting on the drying rack or the grate we recommend that you place a baking tray with a small amount of water on the lowest level of the oven;
- it is advisable to turn the meat over at least once during the roasting time and during roasting you should also baste the meat with its juices or with hot salty water – do not pour cold water over the meat.

BAKING IN THE OVEN – PRACTICAL HINTS

ECO Heating

- ECO Heating is an optimised heating function designed to save energy when preparing food.
- You cannot reduce the cooking time by setting a higher temperature; preheating the oven is not recommended.
- Do not change the temperature setting and do not open the oven door during cooking.

Recommended setting for ECO Heating

Type of dish	Oven functions	Temperature (°C)	Level	Time in minutes
Sponge cake	ECO	180 - 200	2 - 3	25 - 40[1)]
Yeast cake/ Pound cake	ECO	180 - 200	2 - 3	25 - 40[1)]
Fish	ECO	190 - 210	2 - 3	25 - 100[2)]
Beef	ECO	200 - 220	2	90 - 120[2)]
Pork	ECO	200 - 220	2	90 - 160[2)]
Chicken	ECO	180 - 200	2	80 - 100[2)]

[1)] Recommended for baking under 40 minutes.
[2)] Recommended for baking more than 1 kg of meat.

BAKING IN THE OVEN – PRACTICAL HINTS

Oven with conventional heating (including top + bottom heaters)

Type of dish	Type of heating	Temperature (^{0}C)	Level	Time (min.)
Sponge cake		160 - 200	2 - 3	30 - 50
Yeast cake/ Pound cake		160 - 170 [1)]	3	25 - 40 [2)]
Pizza		220 - 240 [1)]	2	15 - 25
Fish		210 - 220	2	45 - 60
Beef		225 - 250	2	120 - 150
Pork		160 - 230	2	90 - 120
Chicken		160 - 180	2	45 - 60
Vegetables		190 - 210	2	40 - 50

The times are apply to dish that is placed into a cold oven. For the preheated oven, the times should be reduced by about 5-10 minutes.

[1)] Preheat

[2)] Baking smaller items

Note: The figures given in Tables are approximate and can be adapted based on your own experience and cooking preferences.

TEST DISHES. According to standard EN 60350-1.

Baking

Type of dish	Accessory	Level	Type of heating	Temperature (°C)	Baking time [2] (min.)
Small cakes	Baking tray	3		160 - 170 [1]	25 - 40 [2]
	Baking tray	3		155 - 170 [1]	25 - 40 [2]
	Baking tray	3		155 - 170 [1]	25 - 40 [2]
	Baking tray Roasting tray	2 + 4 2 - baking tray or roasting tray 4 - baking tray		155 - 170 [1]	25 - 50 [2]
Shortbread	Baking tray	3		150 - 160 [1]	30 - 40 [2]
	Baking tray	3		150 - 170 [1]	25 - 35 [2]
	Baking tray	3		150 - 170 [1]	25 - 35 [2]
	Baking tray Roasting tray	2 + 4 2 - baking tray or roasting tray 4 - baking tray		160 - 175 [1]	25 - 35 [2]
Fatless sponge cake	Wire rack + black baking tin diameter 26cm	3		170 - 180 [1]	30 - 45 [2]
Apple pie	Wire rack + 2 black baking tins diameter 20cm	2 black baking tins placed after the diagonal, back right, front left		180 - 200 [1]	50 - 70 [2]

[1] Preheat, do not use Rapid preheat function.

[2] The times are apply to dish that is placed into a cold oven. For the preheated oven, the times should be reduced by about 5-10 minutes.

TEST DISHES. According to standard EN 60350-1.

Grilling

Type of dish	Accessory	Level	Type of heating	Temperature (⁰C)	Time (min.)
White bread toast	Wire rack	4		250 [1]	1,5 - 2,5
	Wire rack	4		250 [2]	2 - 3
Beef burgers	Wire rack + roasting tray (to gather drops)	4 - wire rack 3 - roasting tray		250 [1]	1st side 10 - 15 2nd side 8 - 13

[1] Preheat for 5 minutes, do not use Rapid preheat function.

[2] Preheat for 8 minutes, do not use Rapid preheat function.

Roasting

Type of dish	Accessory	Level	Type of heating	Temperature (⁰C)	Time (min.)
Whole chicken	Wire rack + roasting tray (to gather drops)	2 - wire rack 1 - roasting tray		180 - 190	70 - 90
	Wire rack + roasting tray (to gather drops)	2 - wire rack 1 - roasting tray		180 - 190	80 - 100

The times are apply to dish that is placed into a cold oven. For the preheated oven, the times should be reduced by about 5-10 minutes.

CLEANING AND MAINTENANCE

By ensuring proper cleaning and maintenance of your cooker you can have a significant influence on the continuing fault-free operation of your appliance.

Before you start cleaning, the cooker must be switched off and you should ensure that all knobs are set to the "●"/"0" position. Do not start cleaning until the cooker has completely cooled.

Ceramic hob

- The hob should be cleaned regularly after each use. If possible, it is recommended that the hob is washed while still warm (after the heating zone indicator goes off). Do not allow the hob to get heavily stained; particualrly from burnt–on spillages from boiled over liquids.
- When cleaning do not use cleaning agents with a strong abbrasive effect, such as e.g. scouring powders containing an abrasive, abrasive compounds, abrasive stones, pumice stones, wire brushes and so on. They may scratch the hob surface, causing irreversible damage.
- Large spillages that are firmly stuck to the hob can be removed by a special scraper; but be careful not to damage the ceramic hob frame when doing this.

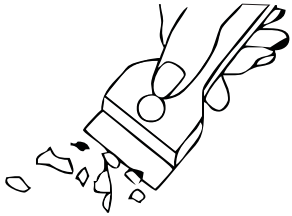

Scraper for cleaning the hob

Caution! The sharp blade should always be protected by adjusting the cover (just push it with your thumb). Injuries are possible so be careful when using this instrument – keep out of reach of children.

- Appropriate light cleaning or washing products are recommended, such as e.g. any kind of liquids or emulsions for fat removal. If the recommended products are not available, it is advisable to use a solution of warm water with a little washing–up liquid or cleaning products for stainless steel sinks.

Oven

- The oven should be cleaned after every use. When cleaning the oven the lighting should be switched on to enable you to see the surfaces better.
- The oven chamber should only be washed with warm water and a small amount of washing-up liquid.

- **Steam Cleaning function:**
  -pour 250ml of water (1 glass) into a bowl placed in the oven on the first level from the bottom,
  - close the oven door,
  - set the temperature knob to 50°C, and the function knob to the bottom heater position
  - heat the oven chamber for approximately 30 minutes,
  - open the oven door, wipe the chamber inside with a cloth or sponge and wash using warm water with washing-up liquid.,

Caution!
Do not use cleaning products containing abrasive materials for the cleaning and maintenance of the glass front panel.

Replacing the halogen bulb in the oven

Before replacing the halogen bulb, make sure the appliance is disconnected from the electric mains to avoid a possible electric shock.

1. Unplug the appliance
2. Remove shelves and trays from the oven.
3. Unscrew and wash the lamp cover and then wipe it dry.
4. Pull the halogen bulb out using a cloth or paper. If necessary, replace the halogen bulb with a new one.
- voltage 230V
- power 25W
5. Replace the halogen bulb in its socket.
6. Screw in the lamp cover.

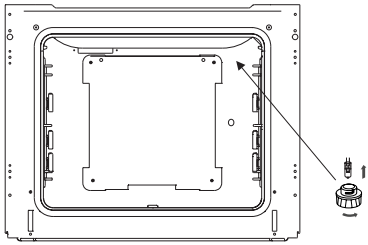

Oven lighting

Note: Make sure not to touch the halogen directly with your fingers!

Wire shelf supports
(Telescopic guides do not appear in all furnace models)
Wire shelf supports are easy to remove for washing. Pull the front catch, then tilt the support and remove from the rear catch.

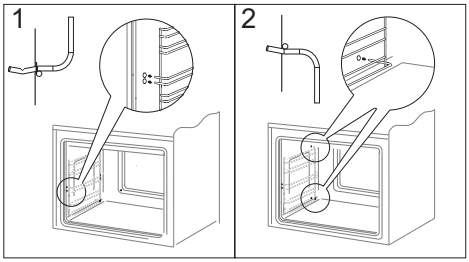

Removing wire shelf supports

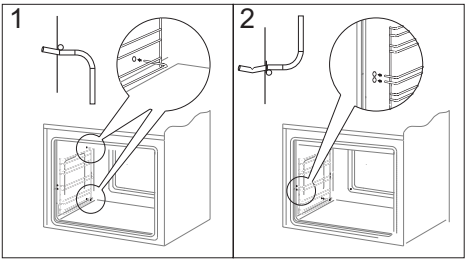

Installing wire shelf supports

The runners should be taken out and washed along with the side racks. Before putting trays on the telescopic runners they should be pulled out (if the oven is warmed up the runners should be pulled out by hooking the back edge of trays on the bumpers in the front part of the telescopic runners) and then insert them together with a tray.

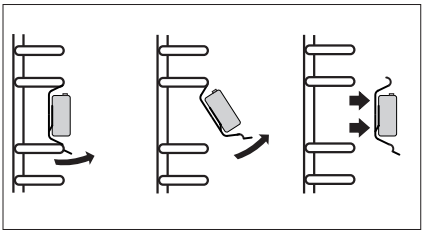

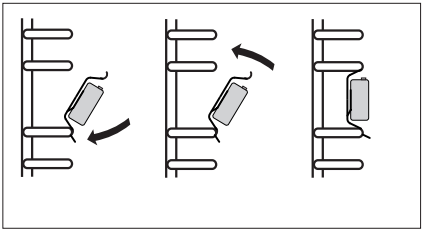

Door removal

In order to obtain easier access to the oven chamber for cleaning, it is possible to remove the door. To do this, tilt the safety catch part of the hinge upwards (fig. A). Close the door lightly, lift and pull it out towards you. In order to fit the door back on to the cooker, do the inverse. When fitting, ensure that the notch of the hinge is correctly placed on the protrusion of the hinge holder. After the door is fitted to the oven, the safety catch should be carefully lowered down again. If the safety catch is not set it may cause damage to the hinge when closing the door.

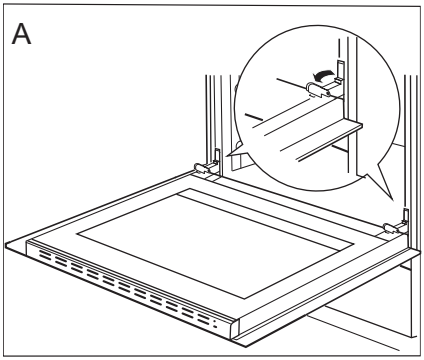

Tilting the hinge safety catches

Removing the inner panel

1. Using a flat screwdriver unhook the upper door slat, prying it gently on the sides (fig. B).
2. Pull the upper door slat loose. (fig. B, C)

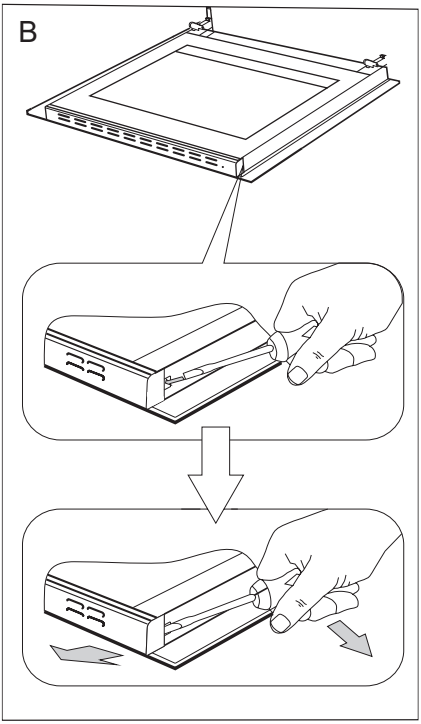

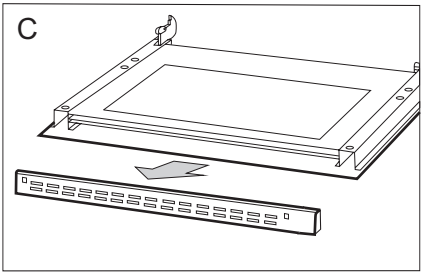

3. Pull the inner glass panel from its seat (in the lower section of the door).
   fig. D, D1.
4. Clean the panel with warm water with some cleaning agent added.
   Carry out the same in reverse order to reassemble the inner glass panel. Its smooth surface shall be pointed upwards.
   Important! Do not force the upper strip in on both sides of the door at the same time. In order to correctly fit the top door strip, first put the left end of the strip on the door and then press the right end in until you hear a “click”. Then press the left end in until you hear a “click”.

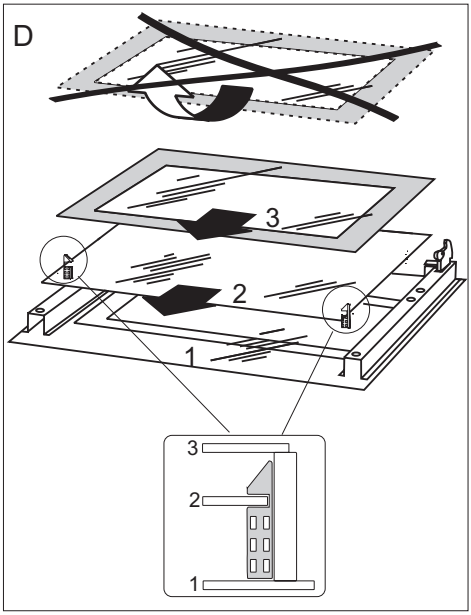

Removal of the internal glass panel.
3 glass panel.

CLEANING AND MAINTENANCE

Regular inspections

Besides keeping the cooker clean, you should:

- carry out periodic inspections of the control elements and cooking units of the cooker. After the guarantee has expired you should have a technical inspection of the cooker carried out at a service centre at least once every two years,
- fix any operational faults,
- carry out periodical maintenance of the cooking units of the cooker.

Caution!
All repairs and regulatory activities should be carried out by the appropriate service centre or by an appropriately authorised fitter.

OPERATION IN CASE OF EMERGENCY

In the event of an emergency, you should:

- switch off all working units of the cooker
- disconnect the mains plug
- call the service centre
- some minor faults can be fixed by referring to the instructions given in the table below.

Before calling the customer support centre or the GRAM service centre check the following points that are presented in the table.

PROBLEM	REASON	ACTION
1. The appliance does not work.	Break in power supply.	Check the household fuse box; if there is a blown fuse replace it with a new one.
2. The oven lighting does not work.	The bulb is loose or damaged.	Tighten up or replace the blown bulb (see '*Cleaning and Maintenance*').

TECHNICAL DATA

Voltage rating	230/400V~50 Hz
Power rating	max. 7,8 kW
Cooker dimensions H/W/D	90 / 50 / 60 cm

Power consumption in standby mode [W]	-
Power consumption in off-mode [W]	0,5
Power consumption in networked standby mode [W]	-
Automatic standby/off time [min]	-

Basic Information:

The product meets the requirements of European standards EN 60335- 1; EN60335-2-6,

The data on the energy labels of electric ovens is given according to standard EN 60350-1 / IEC 60350-1. These values are defined with a standard workload a with the functions active: bottom and top heaters (conventional heating) and fan assisted heating (forced air heating), if these functions are available.

The energy efficiency class was assigned depending on the function available in the product in accordance with the priority below:

Forced air circulation ECO (ring heater + fan)	ECO
Forced air circulation ECO (bottom heater + top + roaster + fan)	ECO
Conventional mode ECO (bottom heater + top)	ECO

During energy consumption test, remove the telescopic runners (if the product is fitted with any).

NO:
Gram A/S
Tel.: 22 07 26 30
www.gram.no

SE:
Gram A/S
Tel.: 040 38 08 40
www.gram.se

FI:
Gram A/S
Tel.: 020 7756 350
www.gram.fi

Gram A/S
Helge Nielsens Allé 7B
DK-8723 Løsning
+45 73 20 10 00
www.gram.dk

IO-CFS-1460 / 9507468
(10.2026 / v8)