GRAM

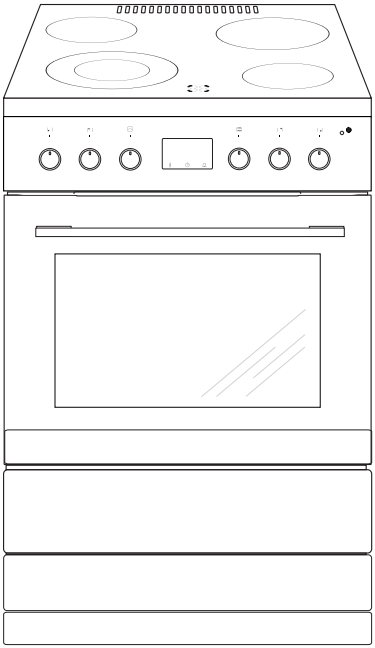

Type

KEP 6246-60 N

EN INSTRUCTION MANUAL

DEAR CUSTOMER,

The cooker is exceptionally easy to use and extremely efficient. After reading the instruction manual, operating the cooker will be easy.

Before being packaged and leaving the manufacturer, the cooker was thoroughly checked with regard to safety and functionality.

Before using the appliance, please read the instruction manual carefully.
By following these instructions carefully you will be able to avoid any problems in using the appliance.

It is important to keep the instruction manual and store it in a safe place so that it can be consulted at any time.
It is necessary to follow the instructions in the manual carefully in order to avoid possible accidents.

Caution!
Do not use the cooker until you have read this instruction manual.

The cooker is intended for household use only.

The manufacturer reserves the right to introduce changes which do not affect the operation of the appliance.

TABLE OF CONTENTS

Safety instructions 4
Description of the appliance 9
Installation 11
Operation 13
Baking in the oven – practical hints 25
Test dishes 28
Cleaning and maintenance 30
Technical data 36

Warning: The appliance and its accessible parts become hot during use. Care should be taken to avoid touching heating elements. Children less than 8 years of age shall be kept away unless continuously supervised.

This appliance can be used by children aged from 8 years and above and persons with reduced physical, sensory or mental capabilities or lack of experience and knowledge if they have been given supervision or instruction concerning use of the appliance in a safe way and understand the hazards involved. Children shall not play with the appliance. Cleaning and user maintenance shall not be made by children without supervision.

Warning: Unattended cooking on a hob with fat or oil can be dangerous and may result in fire.

NEVER try to extinguish a fire with water, but switch off the appliance and then cover flame e.g. with a lid or a fire blanket.

Warning: Danger of fire: do not store items on the cooking surfaces.

Warning: If the surface is cracked, switch off the appliance to avoid the possibillity of electric shock.

During use the appliance becomes hot. Care should be taken to avoid touching heating elements inside the oven.

Accessible parts may become hot during use. Young children should be kept away.

Warning: Do not use harsh abrasive cleaners or sharp metal scrapers to clean the oven door glass since they can scratch the surface, which may result in shattering of the glass.

Warning: Ensure that the appliance is switched off before replacing the lamp to avoid the possibillity of electric shock.

You should not use steam cleaning devices to clean the appliance.

Danger of burns! Hot steam may escape when you open the oven door. Be careful when you open the oven door during or after cooking. Do NOT lean over the door when you open it. Please note that depending on the temperature the steam can be invisible.

Caution: The cooking process has to be supervised. A short term cooking process has to be supervised continuously.

Warning: Use only hob guards designed by manufacturer of the cooking appliance or indicated by the manufacturer of the appliance in the instructions for use as suitable or hob guards incorporated in the appliance. The use of inappropriate guards can cause accidents.

SAFETY INSTRUCTIONS

- Always keep children away from the cooker.
  While in operation direct contact with the cooker may cause burns!
- Ensure that small items of household equipment, including connection leads, do not touch the hot oven or the hob as the insulation material of this equipment is usually not resistant to high temperatures.
- Do not leave the cooker unattended when frying. Oils and fats may catch fire due to overheating or boiling over.
- Do not allow the hob to get soiled and prevent liquids from boiling over onto the surface of the hob. This refers in particular to sugar which can react with the ceramic hob and cause irreversible damage. Any spillages should be cleaned up as they happen.
- Do not place pans with a wet bottom on the warmed up heating zones as this can cause irreversible changes to the hob (irremovable stains).
- Use pans that are specified by the manufacturer as designed for use with a ceramic hob.
- If any defects, deep scratches, cracks or chips appear on the ceramic hob, stop using the cooker immediately and contact the service centre.
- Do not switch on the hob until a pan has been placed on it.
- Do not use pans with sharp edges that may cause damage to the ceramic hob.
- Do not look directly at the halogen heating zones (not covered by a pan) when they are warming up.
- Do not put pans weighing over 15 kg on the opened door of the oven and pans over 25 kg on the hob.
- Do not use harsh cleaning agents or sharp metal objects to clean the door as they can scratch the surface, which could then result in the glass cracking.
- Do not use the cooker in the event of a technical fault. Any faults must be fixed by an appropriately qualified and authorised person.
- In the event of any incident caused by a technical fault, disconnect the power and report the fault to the service centre to be repaired.
- The rules and provisions contained in this instruction manual should be strictly observed. Do not allow anybody who is not familiar with the contents of this instruction manual to operate the cooker.
- The appliance has been designed only for cooking. Any other use (for example for heating) does not comply with its operating profile and may cause danger.

HOW TO SAVE ENERGY

Using energy in a responsible way not only saves money but also helps the environment. So let's save energy! And this is how you can do it:

- **Use proper pans for cooking.**

Pans with thick, flat bases can save up to 1/3 on electric energy. Remember to cover pans if possible otherwise you will use four times as much energy!

- **Match the size of the saucepan to the surface of the heating zone.**

A saucepan should never be smaller than a heating zone.

- **Ensure heating zones and pan bases are clean.**

Soils can prevent heat transfer – and repeatedly burnt–on spillages can often only be removed by products which cause damage to the environment.

- **Do not uncover the pan too often (a watched pot never boils!).**

Do not open the oven door unnecessarily often.

Switch off the oven in good time and make use of residual heat.

For long cooking times, switch off heating zones 5 to 10 minutes before finishing cooking. This saves up to 20% on energy.

Only use the oven when cooking larger dishes.

Meat of up to 1 kg can be prepared more economically in a pan on the cooker hob.

- **Make use of residual heat from the oven.**

If the cooking time is greater than 40 minutes switch off the oven 10 minutes before the end time.

Important! When using the timer, set appropriately shorter cooking times according to the dish being prepared.

- **Only grill with the ultrafan after closing the oven door.**
- **Make sure the oven door is properly closed.**

Heat can leak through spillages on the door seals. Clean up any spillages immediately.

- **Do not install the cooker in the direct vicinity of refrigerators/freezers.**

Otherwise energy consumption increases unnecessarily.

UNPACKING

During transportation, protective packaging was used to protect the appliance against any damage. After unpacking, please dispose of all elements of packaging in a way that will not cause damage to the environment.
All materials used for packaging the appliance are environmentally friendly; they are 100% recyclable and are marked with the appropriate symbol.

Caution! During unpacking, the packaging materials (polythene bags, polystyrene pieces, etc.) should be kept out of reach of children.

DISPOSAL OF THE APPLIANCE

Old appliances should not simply be disposed of with normal household waste, but should be delivered to a collection and recycling centre for electric and electronic equipment. A symbol shown on the product, the instruction manual or the packaging shows that it is suitable for recycling.

Materials used inside the appliance are recyclable and are labelled with information concerning this. By recycling materials or other parts from used devices you are making a significant contribution to the protection of our environment.

Information on appropriate disposal centres for used devices can be provided by your local authority.

DESCRIPTION OF THE APPLIANCE

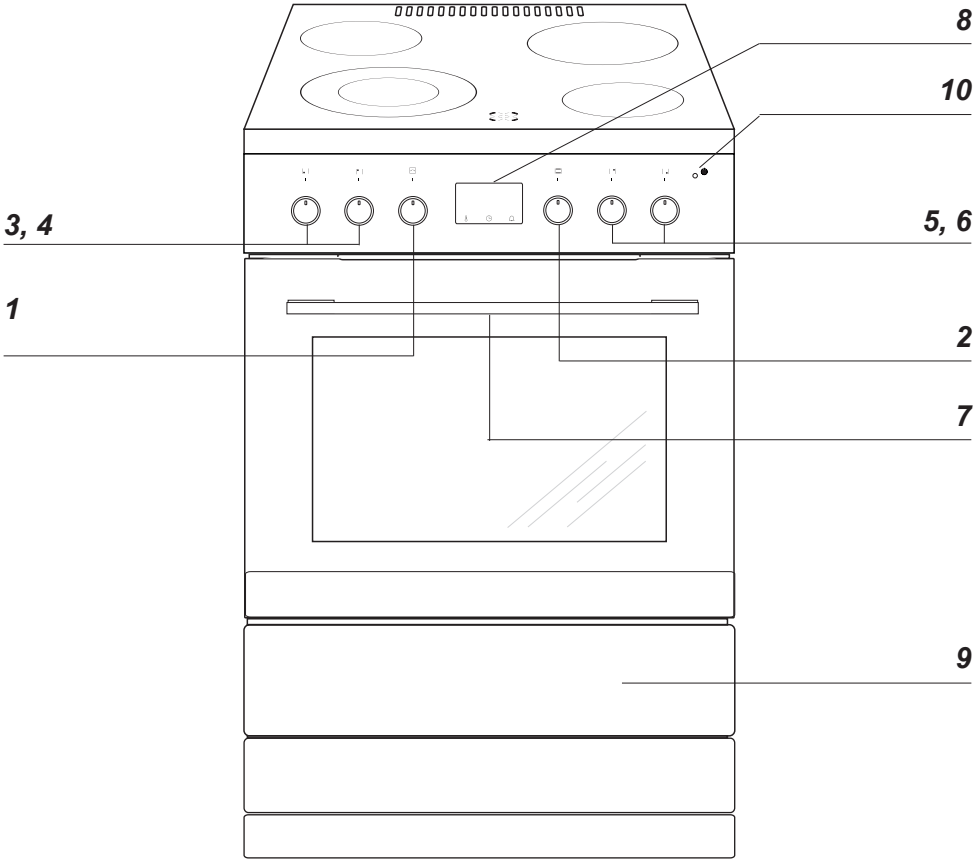

1 *Adjust settings knob +/-*
2 *Oven function knob*
3, 4, 5, 6 *Heating zone control knobs*
7 *Oven door handle*
8 *Electronic programmer*
9 *Drawer*
10 *Door lock indicator light*

SPECIFICATIONS OF THE APPLIANCE

Oven fittings:

Grill grate
(drying rack)

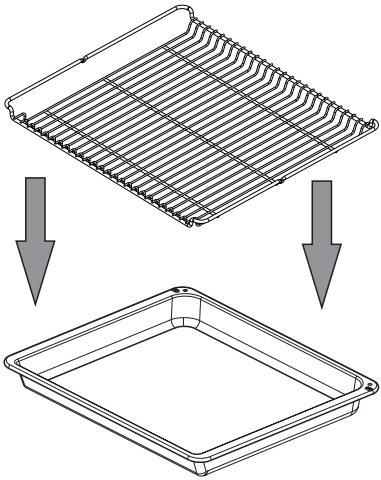

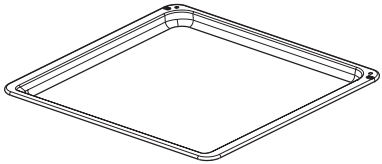

Baking tray

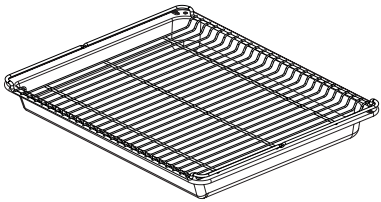

Roasting tray

Side racks

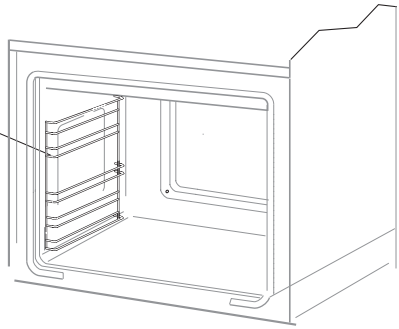

Installing the cooker

- The kitchen should be dry and airy and have effective ventilation according to the existing technical provisions.

- The room should be equipped with a ventilation system that pipes away exhaust fumes created during combustion. This system should consist of a ventilation grid or hood. Hoods should be installed according to the manufacturer's instructions. The cooker should be placed so as to ensure free access to all control elements.
- Coating or veneer used on fitted furniture must be applied with a heat resistant adhesive (100°C). This prevents surface deformation or detachment of the coating. If you are unsure of your furniture's heat resistance, you should leave approximately 2 cm of free space around the cooker. The wall behind the cooker should be resistant to high temperatures. During operation, its back side can warm up to around 50°C above the ambient temperature.

- The cooker should stand on a hard, even floor (do not put it on a base).

- Before you start using the cooker it should be leveled, which is particularly important for fat distribution in a frying pan. To this purpose, adjustable feet are accessible after removal of the drawer. The adjustment range is +/- 5 mm.

Mounting the overturning prevention bracket.

The bracket is mounted to prevent overturning of the cooker. When the overturning prevention bracket is installed, a child who climbs on the oven door will not overturn the appliance.

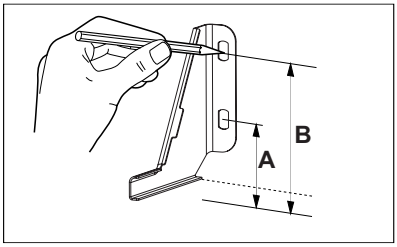

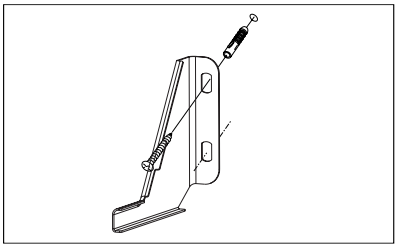

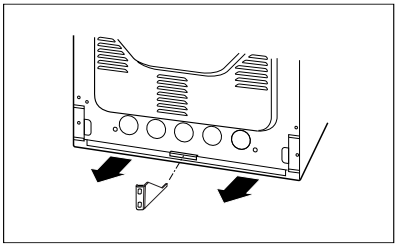

Cooker, height 900 mm
A=123 mm
B=166 mm

INSTALLATION

Installation information

The cooker is designed to be connected to one-phase 230V 1N~ mains power supply. Before connecting the appliance to the mains power supply, the user must ensure that the mains data corresponds to the information given on the manufacturer's data plate, which can be found on either the back or the right-hand side of the cooker or the copy of this plate which is enclosed with this guidance.
The cooker is equipped with a power supply cable. Before connecting the cooker to the power supply, it is important that you read the information given below.

Connecting the cooker to the mains

- Installation must only be carried out by an authorised electrician. This will ensure that the applicable regulations in the “Heavy Current Regulation” are complied with.
- The installation must comply with any special requirements issued by the local electricity supply company.
- The cooker must be connected to a separate power supply circuit.
- Adapting the cooker to operate with three-phase 400V 3N~ mains power supply is posible by apriopriate bridging in the connection box.
- The connection must only be established according to the connection diagrams below.
- When connecting or replacing the power cable, at least one H05VV-F3G4 / H05VV-F5G2.5 conduit or equivalent must be used.
- **Important:** To ensure compliance with the applicable safety requirements, a switch must be fitted which isolates all terminals and has a contact distance of at least 3 mm. (Can be a master switch).

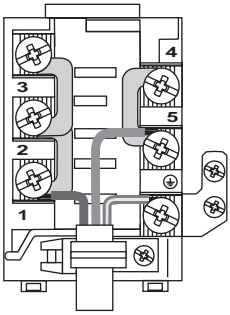

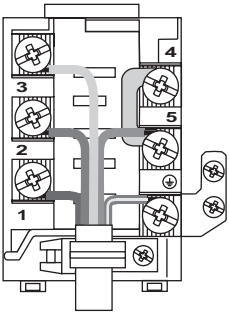

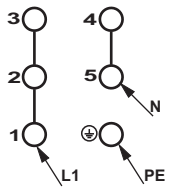

230V 1N~ 50Hz

50A

H05VVF-3G4

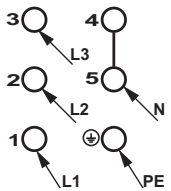

400V 3N~ 50Hz

3x16A

H05VVF-5G2,5

Before first use

- Remove packaging, empty the drawer, clean the interior of the oven and the hob.
- Take out and wash the oven fittings with warm water and a little washing–up liquid.
- Switch on the ventillation in the room or open a window.
- Heat the oven (to a temperature of 250°C, for approx. 30 min.), remove any stains and wash carefully; the heating zones of the hob should be heated for around 4 min. without a pan.

The oven is equipped with a retractable knobs. In order to select a function do the following:
1. Gently press and release a knob which will pop out,
2. Turn the oven functions selection knob to the desired function.
Symbols printed around the knob indicate available oven functions.

1

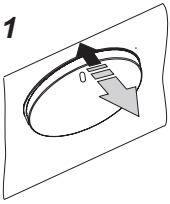

2

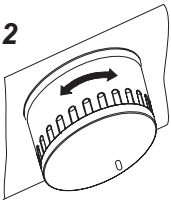

Important!

In ovens equipped with the electronic programmer, the time "**0.00**" will start flashing in the display field upon connection to the power supply.
The programmer should be set with the current time. (See *Electronic programmer* **). If the current time is not set operation of the oven is impossible.**

The electronic prgrammer is equipped with electronic sensors which are switched on by touching or pressing the sensor surface for at least one second. Each sensor reaction is confirmed by the beep.Keep the sensor surface clean at all times.

Important!
The inside of the oven should only be washed with warm water and a small amount of washing–up liquid.

OPERATION

Controlling the heating zones of the ceramic hob.

Choice of cookware

Choose a pan with a diameter that is at least as large as the heating zone. For roasting tins there is a special widened heating zone of 140x250. **Do not use pans with a concave or convex base**. Always remember to put a proper cover on the pan. We recommend the use of pans with thick, even bases.
If the heating zones and pans are solied it is impossible to make full use of the heat.

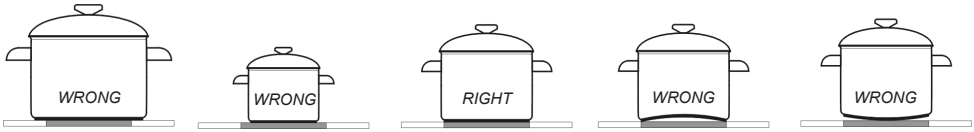

Heat level selection

The heating zones have different levels of heat. The level of heat can be adjusted gradually by turning the appropriate knob to the right or left.

Examples of knob settings

0 Switch off

● MIN. Warming up

1 Stewing vegetables, slow cooking

● Cooking soups, larger dishes

2 Slow frying

● Grilling meat, fish

3 MAX. Fast heating up, fast cooking, frying

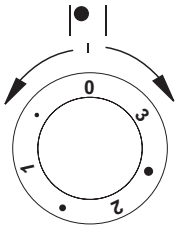

Switching on the wider heating zone

Important!
Only switch on a heating zone by turning the knob clockwise. Turning the knob in the opposite direction can cause damage to the switch.

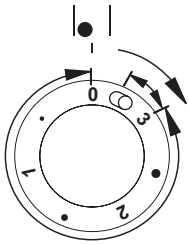

With the settings **0 ● 1 ● 2 ● 3** the knob operates the internal heating zone and it is possible to smoothly control the amount of heat transferred to a pan. Turning the knob temporarily to the position marked ⊂⊃ causes the external heating zone to be switched on. From that point, you can smoothly control the amount of heat trasferred to a pan by both heating zones (internal and external) as the internal switch will switch both zones off only after the knob is set to position 0.

Zone heating indicator

If the temperature of a heating zone exceeds 50°C this is signalled by an indicator which lights up for that zone.
When the heating indicator lights up it warns the person using the cooker against touching a hot heating zone.
For about 5 to 10 minutes after a heating zone is switched off it will still have residual heat that can be used, for example to warm up or keep dishes warm without switching on another heating zone.

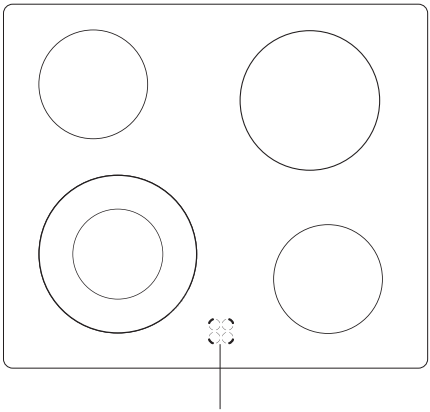

Zone heating indicator

Control panel

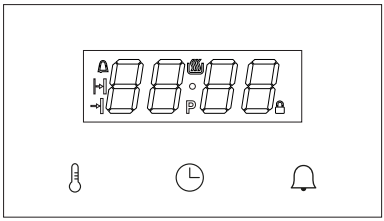

The control panel features an LED display and 3 buttons (touch sensors).

Button (touch sensor)	Description
	Set temperature
	Clock setting
	Minute Minder

Note: You will hear a beep each time you touch a sensor. It is not possible to turn off the acoustic beeps.

The meaning of symbols on the display.

Indicator	Description
	Temperature control dial
	Minute Minder
	Duration
	End Time
	Pyrolytic cleaning
	Child Lock

Oven function knob

The oven can be heated using the lower heater, upper heater, fan heater or grill. Select the function using the function knob.
The figure below shows the functions located on the knob in their defined order:

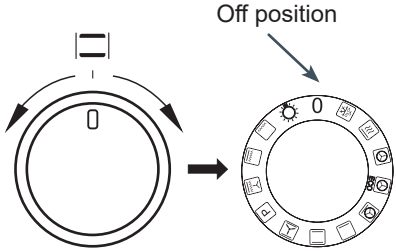

Adjust settings knob +/-

The adjust settings knob is a swivel type which does not rotate fully and can only be turned slightly to the left or right. Use this knob to adjust temperature and time. Turn slightly right to increase value. Turn slightly left to decrease value. Use this knob to adjust temperature and current time. If you keep the knob turned left or right from its default position the rate of value changes will increase.

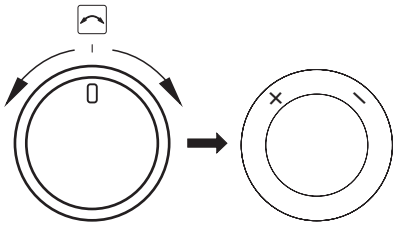

Turn on the power.

When you connect the power supply (or power is restored after a power outage) the appliance will prompt to set the current time, ***0.00*** will flash on the display. Press the button (touch sensor). **.** Turn the +/– knob to adjust the time. You must set the current time to use the appliance.
The function dial must be in position 0 to confirm the time setting. If the function selector dial is in a different position, the indicator flashes and the appliance waits until you turn the function selector dial to 0.
Press the button (touch sensor) to save the time and the appliance enters standby.
Note: In the event of a power outage, all settings such as Duration, Temperature and Heating Function will be lost. You will need to re-enter the settings to continue cooking.
If the pyrolytic cleaning is interrupted (or the door is locked for any other reason – the is on), the oven will start the cooling and door opening procedure before you can set the time. If temperature above 80°C is detected in the oven, cooling fan is activated and this does not affect the time adjustment process. Cooling fan turns off when the temperature drops below 75°C.

Standby mode

Switch the appliance to standby mode to reset all time, temperature and timer settings. Heaters are disconnected. The display shows the current time and has reduced brightness. Press the button (touch sensor) to adjust the time, tone and brightness, and press the button (touch sensor) to adjust the minute minder time setting.
If the temperature in the oven cavity exceeds 80°C, the current oven cavity temperature is displayed (to indicate the residual heat) and the cooling fan operates. When the temperature drops below 75°C, the cooling fan is turned off and the current time is displayed instead of oven cavity temperature.

The appliance enters standby:
- turn the function selector knob to position 0 at any time, you will hear a beep;
- after a power outage when set the current time;
- after a timed programme completes (timed delayed operation, timed operation, minute minder;
- after activation of the Auto Shut-off Safety Device
- when you turn the knob to position 0 during a pyrolytic cleaning cycle, the appliance activates cooling fan to unlock the door, and enters standby only after the appliance has cooled down and the door is unlocked.

Activate the appliance from the standby mode:
Turn the knob from 0 to any available function to activate the appliance from standby.
Note - if the appliance entered the standby mode automatically, you need to first turn the knob to 0 and only then to another function.
When the appliance is in standby mode and the function knob is in a position other than 0 - the indicator flashes.
Deep sleep:
If the appliance is unused for 10 minutes, it enters the deep sleep mode - the sensors and the +/– settings knob are deactivated, and the only method of activating the appliance is to turn the function knob from the “0” position to any other position.

Set current time

You can set the current time in standby only. Press the button (touch sensor) in this mode to display the current time with normal

brightness. Use the +/– knob to adjust the current time, wait 10 seconds to save the current setting and the appliance will enter standby. Press the button (touch sensor) to set the beep tone. The clock operates in 24h mode only.

Night Mode

During 22:00 – 06:00 in standby the display backlight is reduced as set for night-time mode - 2 levels below the current setting.

Change the beep tone

This function is available at any time in standby mode. When setting current time, press the button (touch sensor) to display ***ton1***, where ***1*** is the current beep tone – tones 1 through 3 are available. Turn the +/– knob to change the current tone, then wait 5 seconds to confirm the new setting and the appliance will enter the standby mode.

Adjust display brightness

This function is available at any time in standby mode. When selecting tone, press the button (touch sensor) again to change display brightness and ***bri4*** (brightness 4) will be shown where ***4*** is the brightness level from 1 to 9. Turn the +/– knob to change the brightness, then wait 5 seconds to confirm the new setting and the appliance will enter the standby mode.

Operation.

You can use any baking or cleaning function available on the Function Selector knob.
Auto-off: When minute minder or any timed delayed, timed or cleaning programme is completed, the appliance enters the standby mode even if the function selector knob is set to 0.

Lighting

The appliance automatically controls oven light. By default the oven light is on.
The oven light is off:
- when 0, Pyrolytic cleaning or ECO is selected
- when the oven cavity temperature exceeds 300°C;
- during pyrolytic cleaning and cooling;
- before and after the timed and timed delayed operation;
- in standby mode, if the Function Selector knob is set to a position other than 0.

Cooling fan.

Cooling fan operates independently of the set functions and the appliance mode of operation. Cooling fan turns on when the oven cavity temperature exceeds 80°C and turns off when it fall below is below 75°C.

Thermostat

The thermostat symbol indicates that the heating elements operate. If any of the heating elements operates, the indicator lights up. The indicator goes out, if none of the heating elements operates (e.g. when the oven reaches the desired temperature and the heating elements are disconnected until the temperature drops).

Minute Minder

Touch the button (touch sensor) in any mode to use minute minder. Press to display countdown progress or ***0.00*** if minute minder is not active, the indicator will flash.

Turn the +/– knob to adjust the Duration and press 🔔 to confirm or simply wait 5 seconds.
When the minute minder is counting down, the 🔔 indicator lights up on the display.
When the countdown is complete you will hear a beep, which you can mute by pressing any button (touch sensor).
The appliance will not enter standby until minute minder countdown is completed and beeping alarm is acknowledged.

Oven door

Oven door must be closed during operation. Heating elements are disconnected when you open the door. If the door is open for more than 60 seconds, you will hear an acoustic signal alerting you to an open door. Touch any button (touch sensor) or close the door to silence the alarm. Opening the door does not affect any temperature or time settings, however if the door remains open for more than 10 minutes, the appliance cancels all programmes.

Limit the operating time

For safety reasons, the oven operation is time limited. If the set temperature is up to 100°C, the oven will enter the Standby mode after 10 hours, and if the set temperature is 200°C or more, the oven operation is limited to 3 hours. In the temperature range of 101°C to 199°C, the operation time is limited proportionally between 3 and 10 hours.

Activate a heating function

Turn the function selector knob from 0 to the desired position to activate a heating function. When you set the Function Selector knob to a heating function, the display will show the default temperature for a function, such as ***170°C***.
The displayed temperature flashes (with reduced brightness) and the C indicator lights up steadily. The value changes when you turn the function selector knob.
When you touch the sensor 🌡, the oven activates. After 10 minutes of inactivity, the oven deactivates.
Press the 🕒 button (touch sensor) to set up timed delayed operation.

Set temperature

When you have selected a heating function, use the +/– knob to adjust the temperature. You can adjust the temperature in 5°C steps within the range specified for each programme. Turn and hold the +/– knob for at least 1s to adjust the temperature in 10°C steps.
Press the 🌡 button (touch sensor) to confirm the new temperature setting or simply wait 5 seconds until the appliance displays current time.
Turn the +/– setting knob display the following for 2 seconds:
- left [–]: set temperature;
- right [+]: current oven cavity temperature;
No setting is changed when the temperature is displayed.

Adjust the temperature

Press the 🌡 button (touch sensor) during oven operation to adjust the temperature setting. The temperature flashes (with reduced brightness) and the C indicator lights up steadily. Turn the +/– knob to adjust the temperature. Press the 🌡 button (touch sensor) to confirm the new temperature setting or simply wait 5 seconds.

Change settings during cooking

You can change the function during cooking. If you turn the function knob while modifying the temperature, the default temperature for the new programme is displayed and the 5 second countdown restarts. If you turn the function knob when the temperature is already set, the new programme continues with the set temperature. If the newly selected programme has a lower temperature range then the closest possible temperature is set.

Table of heating functions

Function Description		Oven elements						Temperature [°C]		Default tempera-ture [°C]
		Lighting	Top heater	Roaster heater	Fan heater	Bottom heater	Fan	min.	max	
	Defrosting	√					√	---	---	---
	Quick oven pre-heat	√		√	√		√	30	280	170
	Fan cooking	√			√		√	30	280	170
ECO	ECO				√		√	30	280	170
	Pizza	√			√	√	√	30	280	220
	Conventional	√	√			√		30	280	180
	Pastry	√	√			√	√	30	280	170
P	Pyrolytic cleaning		√	√		√		---	---	480
	Turbo grill	√	√	√			√	30	280	190
	Super grill	√	√	√				30	280	250
	Grill	√		√				30	280	250
	Lighting	√						---	---	---
0	Off							-	-	-

Timed operation

Timed operation involves setting the duration after which the appliance automatically turns off. You can set the duration from 1 minute to 23 hours 59 minutes.
When the appliance is on or when you have turned the function selector to a desired function press the (touch sensor) to set the Duration. The indicator flashes and ***dur*** (duration) is displayed briefly for 1s and then ***0.00*** (or current countdown if the function is already active). Turn the +/– to adjust the Duration and then press the button (touch sensor) to confirm the setting or simply wait 5 seconds. The current time is displayed 5 seconds after you press the button (touch sensor).
The indicator is on during timed operation.
The heating and temperature functions can be freely modified during the time delayed operation.
To cancel timed operation set Duration to 0.00 and press the button (touch sensor) or wait 5 s — the appliance will operate normally.
Once duration has elapsed, you will hear an [end] beep. All heating elements are disconnected. You can silence the alarm as follows:
a) Do one of the following:
- press any button (touch sensor) except ;
- turn the function selector knob;
- turn the +/– knob;
- open the door.
This will clear all function and temperature settings. Even though the Function Selector knob is set to a heating function, the appliance will enter standby.
b) Turn the Function Selector knob to 0 - the appliance will enter standby.
c) Press the button (touch sensor) to set the new Duration and continue cooking with currently set temperature and settings. Note - in this case (when attempting to extend the Duration when the beeping starts after the Duration has elapsed), setting the time to ***0.00*** turns off the oven rather than allowing it to operate indefinitely.

Delayed timed operation

You can set the appliance, so that its timed operation is delayed and cooking ends at a specific time.
You must first set the Duration (same as in timed operation). Press the button (touch sensor) to confirm Duration and ***end*** message will be displayed briefly for 1s and then End Time will be display calculated as Current Time + Duration + 1 minute. Turn the +/– knob to adjust the End Time. Press the button (touch sensor) to confirm End Time or wait 5 s to cancel. Once End Time is confirmed the and indicators light up steadily and the Current Time is shown again.
The and indicators are on during the countdown to Start Time. The symbol indicates when heating elements are on.
Press to view and modify the set duration.. Pressing the button once to set Duration, press again to set End Time and press again to display the current time. Set Duration to ***0.00*** to cancel both Duration and End Time and allow the appliance to operate indefinitely.
You can adjust End Time from (Current Time + Duration + 1 minute) to (Current Time + Duration + 10 hours). You can modify Duration (when End Time is set) from 0:00 to (Duration – Current Time – 1 minute).
When you have finished cooking, set the function selector knob to 0.

Meat probe

You can connect the meat probe at any time. This has no effect when the appliance is off.

When you plug in the meat probe when the appliance operates (the function and temperature are set), the temperature display is dimmed and flashes — the current meat probe temperature, digits 1-2, and the set meat probe temperature, digits 3-4 (default 80°C) are displayed.
Immediately after you insert the meat probe, use the +/– knob to directly adjust the set meat probe temperature. Press the button (touch sensor) or wait 5 seconds to confirm the current setting. The set temperature is displayed steadily, it does not flash.
The operation of the oven is modified as follows.
When the meat probe temperature is lower than the set target temperature - the thermostat maintains the set oven cavity temperature.
When the meat probe temperature reaches the set target temperature:
- the heaters are disconnected;
- you hear meat probe temperature alarm;
You can mute the meat probe temperature alarm as follows:
- turn the +/– to “+” to mute the alarm and you can then set the new meat probe target temperature;
- use any other control to mute the alarm and the appliance will enter standby.

When you use a meat probe you cannon use a timed operation or delayed timed operation. When you plug in the meat probe any previously set Duration is cancelled. The meat probe does not affect the set function and oven cavity temperature.
When you plug in the meat probe in standby or when the appliance is on, the oven operation is unchanged until the function and oven cavity temperature are confirmed. Once the temperature is confirmed, the oven starts heating, but instead of displaying the current time, it displays the set meat probe target temperature.
When you unplug the meat probe before the set target temperature is reached, the oven continues to operate normally.

When the meat probe is plugged in you can view and adjust the temperature as follows:
- turn the +/– knob to display oven cavity temperature briefly and then meat probe temperature is displayed.
- press the button (touch sensor) to adjust oven cavity temperature;
- press the button again to confirm the adjusted oven cavity temperature and then current meat probe temperature is displayed.

Recommended meat probe temperature settings

Type of meat	Temperature [°C]
Pork	85 - 90
Beef	80 - 85
Veal	75 - 80
Lamb	80 - 85
Venison	80 - 85

Note: Only use the meat probe provided with your appliance.

Pyrolytic cleaning

In the case of pyrolysis the ***P2.00*** is flashing on the display and the indicator is on. Turn the +/– knob to adjust the Duration to 2.00 - 2.30 - 3.00 hours. Press or wait 20 s to start pyrolytic cleaning.

The Pyrolytic cleaning programme comes with special requirements.

First, the door status is checked: When the oven door is open, the indicator flashes and the appliance waits 10 minutes until the oven door is closed and if it is not, the pyrolytic programme is cancelled.

When the door is closed the indicator is on and the door is locked. The indicator is displayed and pyrolytic cleaning starts for 2.00 – 2.30 – 3.00 hours, depending on the Duration you have set.

The appliance displays duration time left until pyrolytic cleaning completes.

One hour before pyrolytic cleaning completes, the heaters are disconnected, the temperature ***--- C*** is displayed and the appliance stars cooling down.

The door is unlocked when temperature is less than 150°C. The indicator is off when the door is unlocked. The pyrolytic cleaning programme ends, but you cannot continue cooking.

No settings can be changed during the pyrolytic cleaning and you cannot continue cooking with these settings, however you can view current settings and temperature. When you silence the alarm, the appliance always enters standby mode.

NOTE:

The oven door is equipped with a lock, which prevents it from being opened during the cleaning process. Do not open the door so as not to interrupt the cleaning process.

If there is a short power outage during pyrolytic cleaning the appliance starts cooling down and eventually unlocks the door.

If you interrupt the pyrolytic cleaning by turning the function selector knob to another position (such as 0), the appliance starts cooling down and eventually unlocks the door. When the door is unlocked the appliance switches to standby.

If during pyrolytic cleaning you open the door before it is locked, there will be an [open door] beep and pyrolytic cleaning is aborted.

Before starting the pyrolytic cleaning, please see "Cleaning and Maintenance."

Error Codes

If any error is detected, the programme is interrupted and the error code is shown on the display:

E1 - no cavity temperature sensor detected, do not use the appliance

E2 - short circuit or damage to the cavity temperature sensor, do not use the appliance.

E3 - appliance overheated, do not use the appliance until it has cooled down.

E4 - meat probe error - if the error disappears when you unplug the meat probe, you can use the oven with functions that do not require a meat probe

E5 - meat probe is incorrectly inserted or core temperature probe short circuit.

E6 - oven cavity temperature exceeding 320°C for functions other than pyrolytic cleaning, or cavity temperature sensor malfunction - do not use the appliance

Prob - meat probe inserted during the pyrolytic cleaning.

Use of the grill

The grilling process operates through infrared rays emitted onto the dish by the incandescent grill heater.

In order to switch on the grill you need to:

- Set the oven knob to the position marked grill ,
- Heat the oven for approx. 5 minutes (with the oven door shut).
- Insert a tray with a dish onto the appropriate cooking level; and if you are grilling on the grate insert a tray for dripping on the level immediately below (under the grate).
- Close the oven door.

For grilling with the function grill and combined grill the temperature must be set to 250ºC, but for the function fan and grill it must be set to a maximum of 190ºC.

Warning!
When using function grill it is recommended that the oven door is closed.
When the grill is in use accessible parts can become hot.
It is best to keep children away from the oven.

BAKING IN THE OVEN – PRACTICAL HINTS

Baking

- we recommend using the baking trays which were provided with your cooker;
- it is also possible to bake in cake tins and trays bought elsewhere which should be put on the drying rack; for baking it is better to use black trays which conduct heat better and shorten the baking time;
- shapes and trays with bright or shiny surfaces are not recommended when using the conventional heating method (top and bottom heaters), use of such tins can result in undercooking the base of cakes;
- when using the ultra-fan function it is not necessary to initially heat up the oven chamber, for other types of heating you should warm up the oven chamber before the cake is inserted;
- before the cake is taken out of the oven, check if it is ready using a wooden stick (if the cake is ready the stick should come out dry and clean after being inserted into the cake);
- after switching off the oven it is advisable to leave the cake inside for about 5 min.;
- temperatures for baking with the ultra-fan function are usually around 20 – 30 degrees lower than in normal baking (using top and bottom heaters);
- the baking parameters given in Table are approximate and can be corrected based on your own experience and cooking preferences;
- if information given in recipe books is significantly different from the values included in this instruction manual, please apply the instructions from the manual.

Roasting meat

- cook meat weighing over 1 kg in the oven, but smaller pieces should be cooked on the cooker.
- use heatproof ovenware for roasting, with handles that are also resistant to high temperatures;
- when roasting on the drying rack or the grate we recommend that you place a baking tray with a small amount of water on the lowest level of the oven;
- it is advisable to turn the meat over at least once during the roasting time and during roasting you should also baste the meat with its juices or with hot salty water – do not pour cold water over the meat.

BAKING IN THE OVEN – PRACTICAL HINTS

ECO fan assisted heating

- ECO fan assisted heating is an optimised heating function designed to save energy when preparing food.
- You cannot reduce the cooking time by setting a higher temperature; preheating the oven is not recommended.
- Do not change the temperature setting and do not open the oven door during cooking.

Recommended setting for ECO fan assisted heating

Type of dish	Oven functions	Temperature (°C)	Level	Time in minutes
Sponge cake	ECO	180 - 200	2 - 3	50 - 70
Yeast cake/ Pound cake	ECO	180 - 200	2	50 - 70
Fish	ECO	190 - 210	2 - 3	45 - 60
Beef	ECO	200 - 220	2	90 - 120
Pork	ECO	200 - 220	2	90 - 160
Chicken	ECO	180 - 200	2	80 - 100

BAKING IN THE OVEN – PRACTICAL HINTS

Oven with automatic air circulation (including a fan and ring heater)

Type of dish	Type of heating	Temperature (°C)	Level	Time (min.)
Sponge cake		160 - 200	2 - 3	30 - 50
Yeast cake/ Pound cake		160 - 170 [1)]	3	25 - 40 [2)]
Yeast cake/ Pound cake		155 - 170 [1)]	3	25 - 40 [2)]
Pizza		200 - 230 [1)]	2 - 3	15 - 25
Fish		210 - 220	2	45 - 60
Fish		160 - 180	2 - 3	45 - 60
Fish		190	2 - 3	60 - 70
Sausages		230 - 250	4	14 - 18
Beef		225 - 250	2	120 - 150
Beef		160 - 180	2	120 - 160
Pork		160 - 230	2	90 - 120
Pork		160 - 190	2	90 - 120
Chicken		180 - 190	2	70 - 90
Chicken		160 - 180	2	45 - 60
Chicken		175 - 190	2	60 - 70
Vegetables		190 - 210	2	40 - 50
Vegetables		170 - 190	3	40 - 50

The times are apply to dish that is placed into a cold oven. For the preheated oven, the times should be reduced by about 5-10 minutes.

[1)] Preheat

[2)] Baking smaller items

Note: The figures given in Tables are approximate and can be adapted based on your own experience and cooking preferences.

TEST DISHES. According to standard EN 60350-1.

Baking

Type of dish	Accessory	Level	Type of heating	Temperature (°C)	Baking time [2] (min.)
Small cakes	Baking tray	3		160 - 170 [1]	25 - 40 [2]
	Baking tray	3		155 - 170 [1]	25 - 40 [2]
	Baking tray	3		155 - 170 [1]	25 - 40 [2]
	Baking tray Roasting tray	2 + 4 2 - baking tray or roasting tray 4 - baking tray		155 - 170 [1]	25 - 50 [2]
Shortbread	Baking tray	3		150 - 160 [1]	30 - 40 [2]
	Baking tray	3		150 - 170 [1]	25 - 35 [2]
	Baking tray	3		150 - 170 [1]	25 - 35 [2]
	Baking tray Roasting tray	2 + 4 2 - baking tray or roasting tray 4 - baking tray		160 - 175 [1]	25 - 35 [2]
Fatless sponge cake	Wire rack + black baking tin diameter 26cm	3		170 - 180 [1]	30 - 45 [2]
Apple pie	Wire rack + 2 black baking tins diameter 20cm	2 black baking tins placed after the diagonal, back right, front left		180 - 200 [1]	50 - 70 [2]

[1] Preheat, do not use Rapid preheat function.

[2] The times are apply to dish that is placed into a cold oven. For the preheated oven, the times should be reduced by about 5-10 minutes.

TEST DISHES. According to standard EN 60350-1.

Grilling

Type of dish	Accessory	Level	Type of heating	Temperature (°C)	Time (min.)
White bread toast	Wire rack	4		250 [1]	1,5 - 2,5
	Wire rack	4		250 [2]	2 - 3
Beef burgers	Wire rack + roasting tray (to gather drops)	4 - wire rack 3 - roasting tray		250 [1]	1st side 10 - 15 2nd side 8 - 13

[1] Preheat for 5 minutes, do not use Rapid preheat function.

[2] Preheat for 8 minutes, do not use Rapid preheat function.

Roasting

Type of dish	Accessory	Level	Type of heating	Temperature (°C)	Time (min.)
Whole chicken	Wire rack + roasting tray (to gather drops)	2 - wire rack 1 - roasting tray		180 - 190	70 - 90
	Wire rack + roasting tray (to gather drops)	2 - wire rack 1 - roasting tray		180 - 190	80 - 100

The times are apply to dish that is placed into a cold oven. For the preheated oven, the times should be reduced by about 5-10 minutes.

CLEANING AND MAINTENANCE

By ensuring proper cleaning and maintenance of your cooker you can have a significant influence on the continuing fault-free operation of your appliance.

Before you start cleaning, the cooker must be switched off and you should ensure that all knobs are set to the "●"/"0" position. Do not start cleaning until the cooker has completely cooled.

Ceramic hob

- The hob should be cleaned regularly after each use. If possible, it is recommended that the hob is washed while still warm (after the heating zone indicator goes off). Do not allow the hob to get heavily stained; particualrly from burnt–on spillages from boiled over liquids.
- When cleaning do not use cleaning agents with a strong abbrasive effect, such as e.g. scouring powders containing an abrasive, abrasive compounds, abrasive stones, pumice stones, wire brushes and so on. They may scratch the hob surface, causing irreversible damage.
- Large spillages that are firmly stuck to the hob can be removed by a special scraper; but be careful not to damage the ceramic hob frame when doing this.

Caution! The sharp blade should always be protected by adjusting the cover (just push it with your thumb). Injuries are possible so be careful when using this instrument – keep out of reach of children.

- Appropriate light cleaning or washing products are recommended, such as e.g. any kind of liquids or emulsions for fat removal. If the recommended products are not available, it is advisable to use a solution of warm water with a little washing–up liquid or cleaning products for stainless steel sinks.

Oven

- The oven should be cleaned after every use. When cleaning the oven the lighting should be switched on to enable you to see the surfaces better.
- The oven chamber should only be washed with warm water and a small amount of washing-up liquid.

- **Steam Cleaning function:**
  -pour 250ml of water (1 glass) into a bowl placed in the oven on the first level from the bottom,
  - close the oven door,
  - set the temperature knob to 50°C, and the function knob to the bottom heater position
  - heat the oven chamber for approximately 30 minutes,
  - open the oven door, wipe the chamber inside with a cloth or sponge and wash using warm water with washing-up liquid.,

Caution!
Do not use cleaning products containing abrasive materials for the cleaning and maintenance of the glass front panel.

Wire shelf supports

Wire shelf supports are esay to remove for wasking. Pull the front catch, then tilt the support and remove from the rear catch.

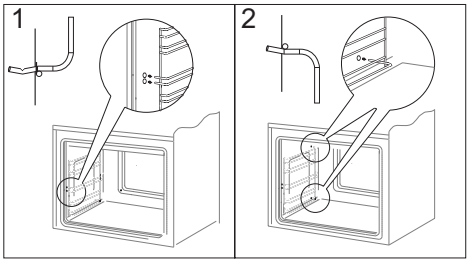

Removing wire shelf supports

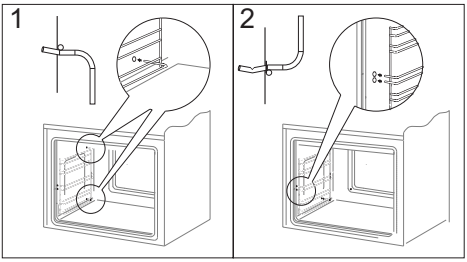

Installing wire shelf supports

Replacing the halogen bulb in the oven

Before replacing the halogen bulb, make sure the appliance is disconnected from the electric mains to avoid a possible electric shock.

1. Unplug the appliance
2. Remove shelves and trays from the oven.
3. Unscrew and wash the lamp cover and then wipe it dry.
4. Pull the halogen bulb out using a cloth or paper. If necessary, replace the halogen bulb with a new one.
- voltage 230V
- power 25W
5. Replace the halogen bulb in its socket.
6. Screw in the lamp cover.

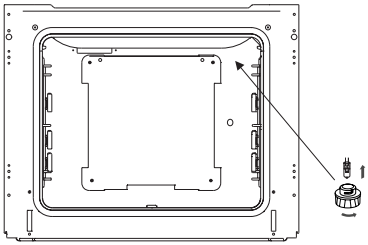

Oven lighting

Note: Make sure not to touch the halogen directly with your fingers!

Door removal

In order to obtain easier access to the oven chamber for cleaning, it is possible to remove the door. To do this, tilt the safety catch part of the hinge upwards (fig. A). Close the door lightly, lift and pull it out towards you. In order to fit the door back on to the cooker, do the inverse. When fitting, ensure that the notch of the hinge is correctly placed on the protrusion of the hinge holder. After the door is fitted to the oven, the safety catch should be carefully lowered down again. If the safety catch is not set it may cause damage to the hinge when closing the door.

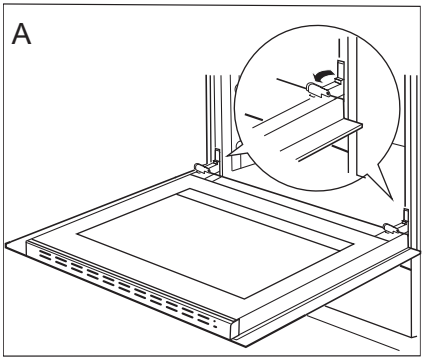

Tilting the hinge safety catches

Removing the inner panel

1. Using a cross-head screwdriver undo the screws in the upper door slat (fig. B).
2. Using a flat screwdriver remove the upper door slat, prying it gently on the sides (fig. B, C).

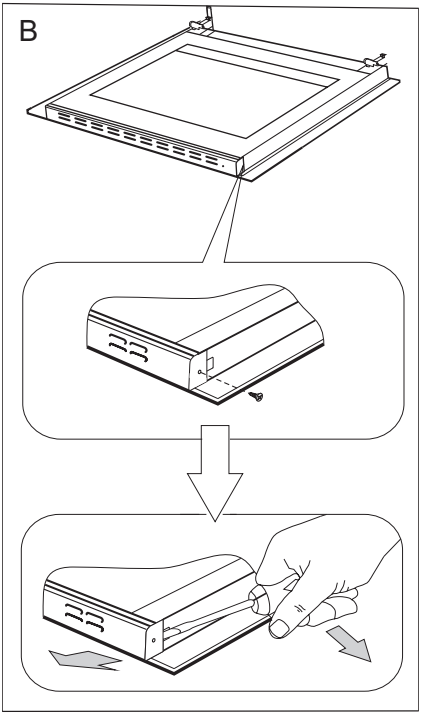

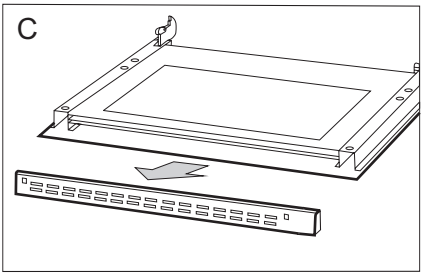

3. Pull the inner glass panel from its seat (in the lower section of the door).
   Important! Risk of damage to glass panel mounting. Do not lift the glass panel up but pull it out.
   Remove the inner panel (fig. D).
4. Clean the panel with warm water with some cleaning agent added.
   Carry out the same in reverse order to reassemble the inner glass panel. Its smooth surface shall be pointed upwards.

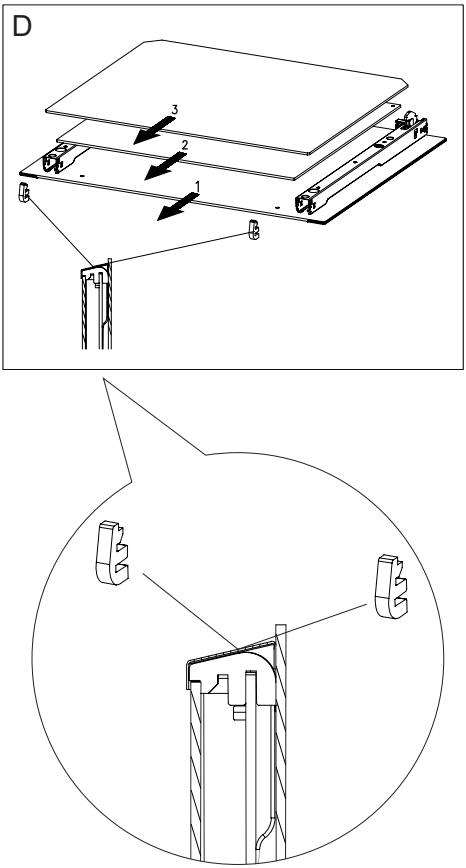

Removal of the internal glass panel

Pyrolytic cleaning

Oven pyrolytic self-cleaning. The oven heats up to a temperature of about 480°C.Grilling or baking residue is burnt into an easy to remove ash that can be wiped off with a damp cloth.

Before pyrolytic cleaning.

Important!
Before starting pyrolytic cleaning, make sure that all items which do not withstand pyrolisys have been removed from the oven.

Important! The temperature probe socket is protected with a cap.
Remove the protective cap from the socket before you start the pyrolytic cleaning.

- Remove stubborn stains from the oven chamber.
- Clean the outside of the oven with a damp cloth.
- Follow the instructions.

During the cleaning process.

- Do not leave the cloth near the hot oven.
- Do not use the hob.
- Do not turn on the oven lighting.
- The oven door is equipped with a lock, which prevents it from being opened during the cleaning process. Do not open the door so as not to interrupt the cleaning process.

Important!
During pyrolytic cleaning, the oven chamber can reach a very high temperature. Consequently, the outer oven surfaces can heat up more than usual, so keep children away at all times.
Some fumes can be emitted during the cleaning, so make sure the kitchen is well ventilated.

The pyrolytic cleaning process:

- Close the oven door.
- Follow the instructions in the *Pyrolytic cleaning* section.

Important!

If the oven temperature is high (higher than in normal use) the door will not be unlocked. Once the oven cools down, you can open the door and remove the ash with a soft, damp cloth. Replace the wire shelf supports and other accessories. Your oven is ready for use.

CLEANING AND MAINTENANCE

Regular inspections

Besides keeping the cooker clean, you should:

- carry out periodic inspections of the control elements and cooking units of the cooker. After the guarantee has expired you should have a technical inspection of the cooker carried out at a service centre at least once every two years,
- fix any operational faults,
- carry out periodical maintenance of the cooking units of the cooker.

Caution!
All repairs and regulatory activities should be carried out by the appropriate service centre or by an appropriately authorised fitter.

OPERATION IN CASE OF EMERGENCY

In the event of an emergency, you should:

- switch off all working units of the cooker
- disconnect the mains plug
- call the service centre
- some minor faults can be fixed by referring to the instructions given in the table below.

Before calling the customer support centre or the GRAM service centre check the following points that are presented in the table..

PROBLEM	REASON	ACTION
1. The appliance does not work.	Break in power supply.	Check the household fuse box; if there is a blown fuse replace it with a new one.
2. The oven lighting does not work.	The bulb is loose or damaged.	Tighten up or replace the blown bulb (see '*Cleaning and Maintenance*').

TECHNICAL DATA

Voltage rating	230V~50 Hz
Power rating	max. 10,0 kW
Cooker dimensions H/W/D	90 / 60 / 60,5 cm

Basic Information:

The product meets the requirements of European standards EN 60335- 1; EN60335-2-6.

The data on the energy labels of electric ovens is given according to standard EN 60350-1 / IEC 60350-1. These values are defined with a standard workload a with the functions active: bottom and top heaters (conventional heating) and fan assisted heating (forced air heating), if these functions are available.

The energy efficiency class was assigned depending on the function available in the product in accordance with the priority below:

Forced air circulation ECO (ring heater + fan)	ECO
Forced air circulation ECO (bottom heater + top + roaster + fan)	ECO
Conventional mode ECO (bottom heater + top)	ECO

During energy consumption test, remove the telescopic runners (if the product is fitted with any).

NO:
Gram A/S
Tel.: 22 07 26 30
www.gram.no

SE:
Gram A/S
Tel.: 040 38 08 40
www.gram.se

FI:
Gram A/S
Tel.: 020 7756 350
www.gram.fi

Gram A/S
Helge Nielsens Allé 7B
DK-8723 Løsning
+45 73 20 10 00
www.gram.dk

IO-CFS-2058 / 9512226
(10.2026 V7)